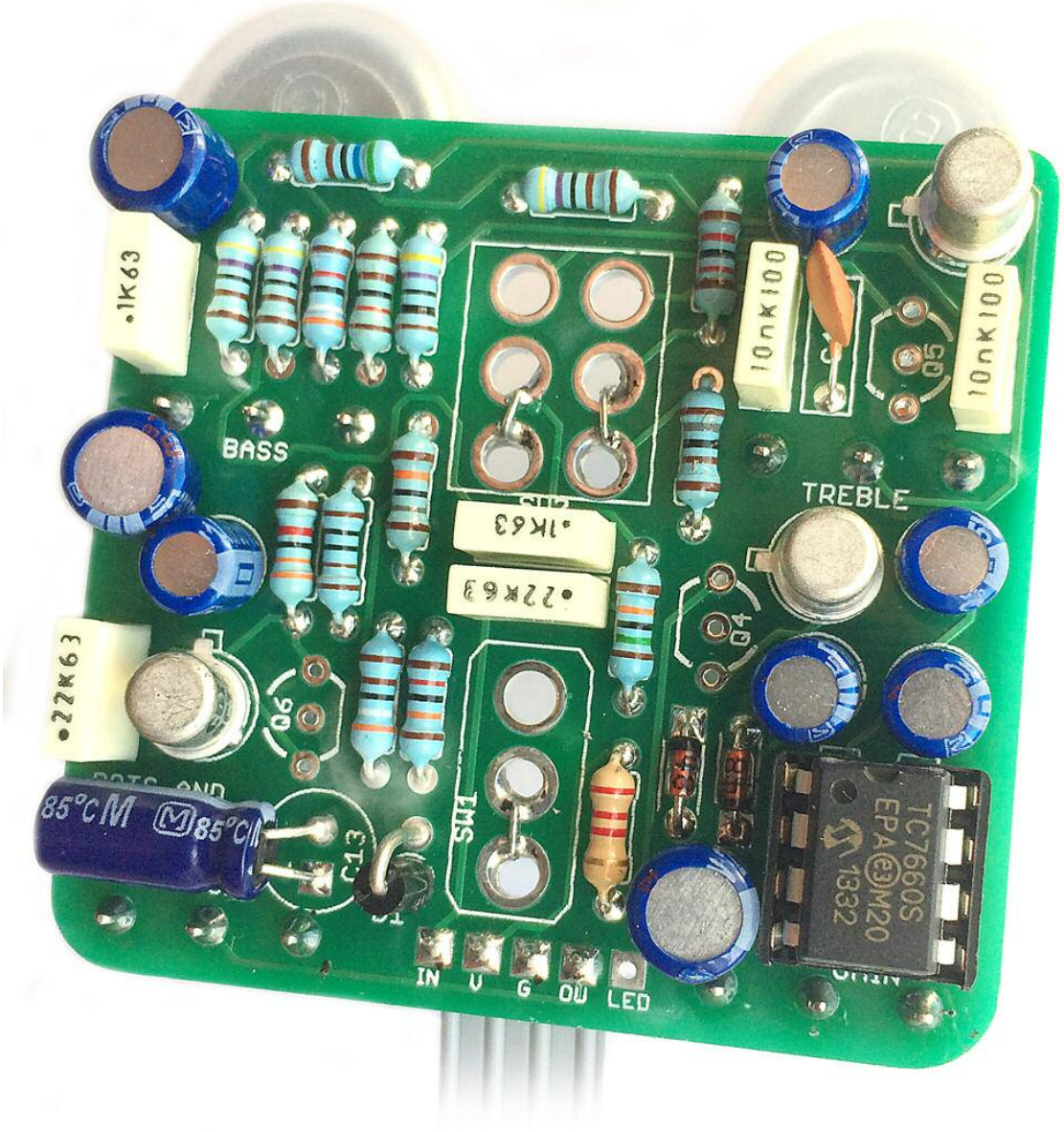

Vintage POW!

Clone of Colorsound's Overdriver / Power Boost

Contents of this document are ©2015 Pedal Parts Ltd.
No reproduction permitted without the express written permission of Pedal Parts Ltd. All rights reserved.

Important notes

If you're using any of our footswitch daughterboards, DOWNLOAD THE DAUGHTERBOARD DOCUMENT

- Download and read the appropriate build document for the daughterboard as well as this one BEFORE you start.
- DO NOT solder the supplied Current Limiting Resistor (CLR) to the main circuit board even if there is a place for it. This should be soldered to the footswitch daughterboard.

POWER SUPPLY

Unless otherwise stated in this document this circuit is designed to be powered with 9V DC.

COMPONENT SPECS

Unless otherwise stated in this document:

- Resistors should be 0.25W. You can use those with higher ratings but check the physical size of them.
- Electrolytics caps should be at least 25V for 9V circuits, 35V for 18V circuits. Again, check physical size if using higher ratings.

LAYOUT CONVENTIONS

Unless otherwise stated in this document, the following are used:

- **Electrolytic capacitors:**
  Long leg (anode) to square pad.
- **Diodes:**
  Striped leg (cathode) to square pad.
- **ICs:**
  Square pad indicates pin 1.

Schematics

Power filtering and charge pump not shown - more later

OVERDRIVER

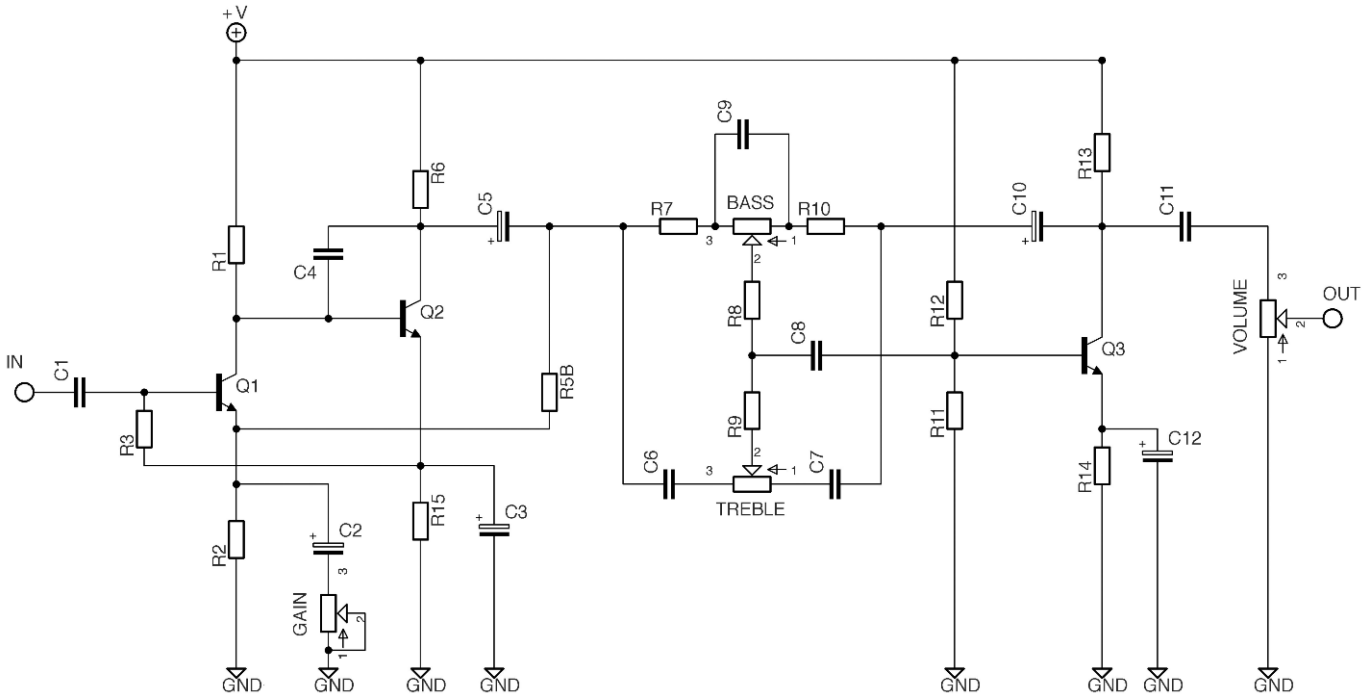

POWER BOOST

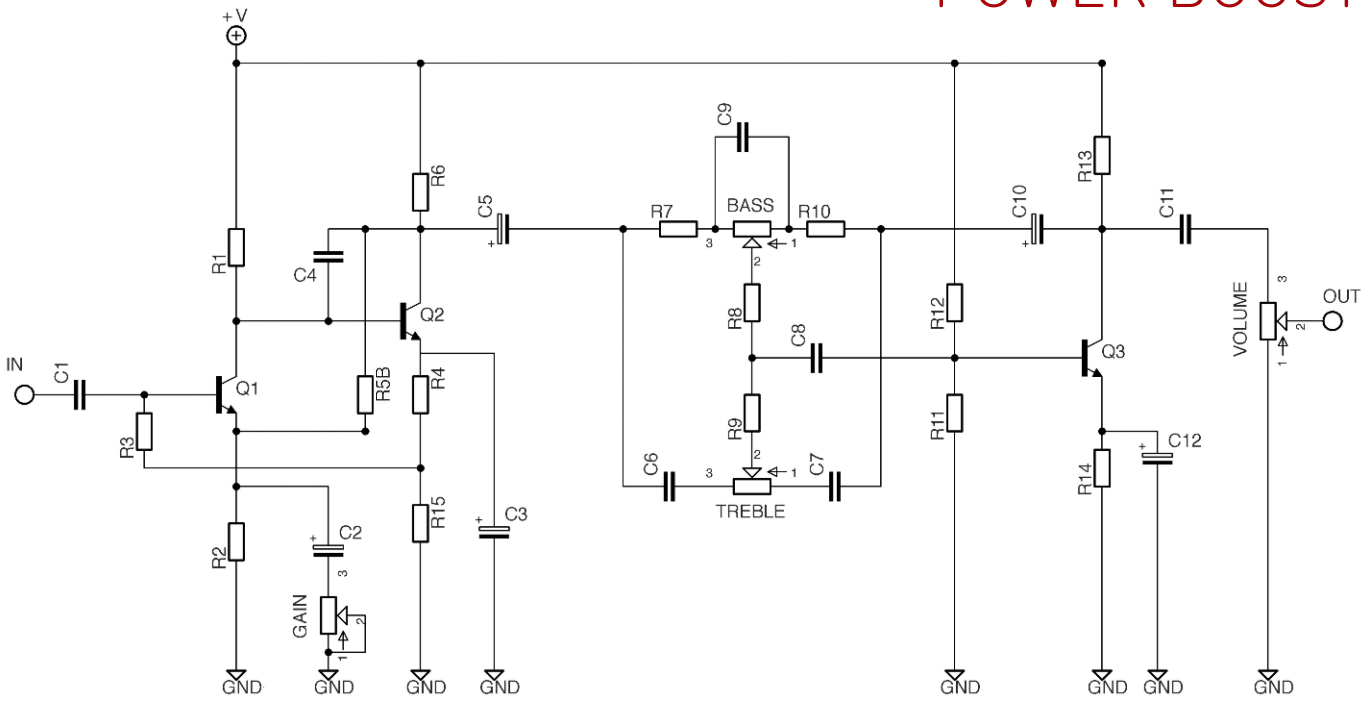

IMPORTANT JUMPERS

OVERDRIVER
Make the connections shown in red.

POWER BOOST
Make the connections shown in blue. If you're not using the charge pump make the red connection on SW1 rather than blue.

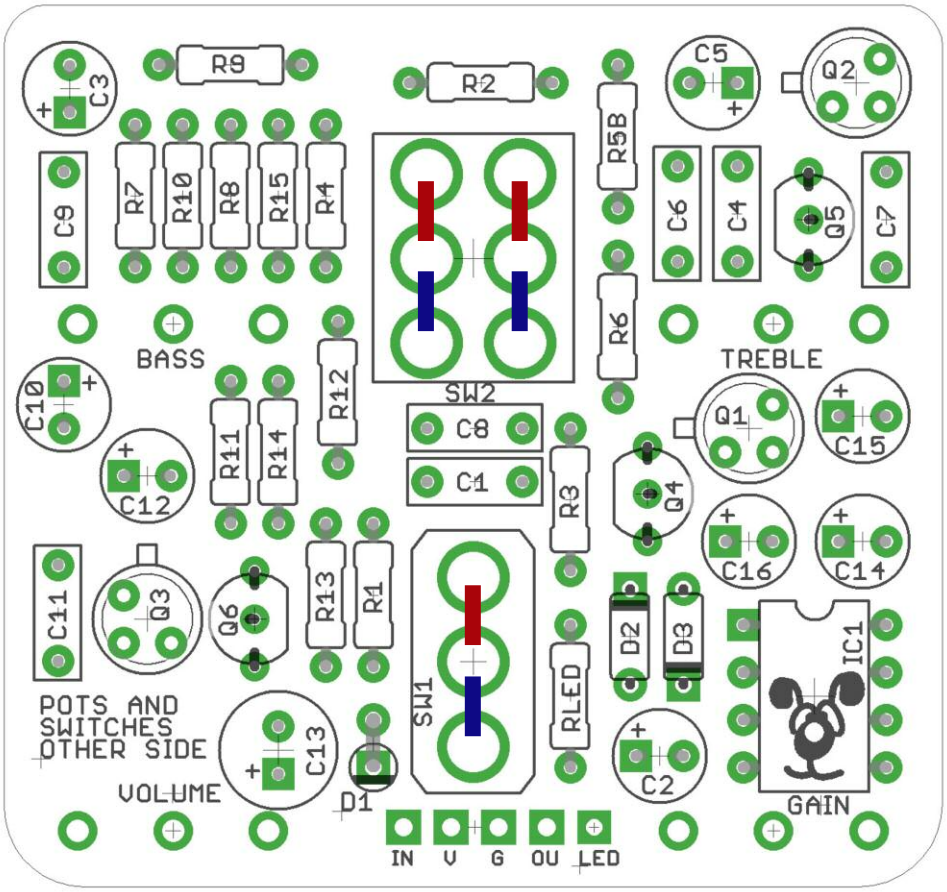

PCB Layout ©2015 Pedal Parts Ltd.

BOM

	OD	PB
R1	120K	120K
R2	6K8	4K7
R3	150K	150K
R4	empty	470R
R5B	12K	12K
R6	1K8	1K8
R7	4K7	4K7
R8	39K	39K
R9	5K6	5K6
R10	4K7	4K7
R11	33K	33K
R12	150K	180K
R13	1K8	3K9
R14	470R	1K
R15	470R	1K2
RLED	2K2	4K7

	OD	PB
C1	220n	220n
C2	22u elec	22u elec
C3	22u elec	22u elec
C4	220p	220p
C5	10u elec	10u elec
C6	10n	10n
C7	10n	10n
C8	100n	100n
C9	100n	100n
C10	10u elec*	22u elec*
C11	220n	220n
C12	22u elec	10u elec
C13	100u elec	100u elec

Q1-3	BC109
or Q4-6	BC169C/ BC184L
D1	1N4001
DRIVE	5KC**
TREB	100KB
BASS	100KB
VOL	100KA
CHARGE PUMP	
D2-3	1n4148
C14-16	10u elec
IC1	TC7660S‡

If you aren't using the CHARGE PUMP just leave all those component spaces empty - no jumpers.

*Reverse the orientation of C10. It'll work either way, but to stay true to the original schematic...

**Original Drive pot was 10KB but all the control is bunched in the last couple of degrees of turn. 5KC works much better.

‡make sure your 7660 has an S suffix to ensure you don't get any high frequency interference into your signal.

The PCB has been designed to easily take either BC109 or BC169C without any fiddly leg twisting. Only use one or the other sets of spots - Q1-3 or Q4-6.

The power and signal pads on the PCB conform to the FuzzDog Direct Connection format, so can be paired with the appropriate daughterboard for quick and easy offboard wiring.

Be very careful when soldering the diodes, LED and transistors. They're very sensitive to heat. You should use some kind of heat sink (crocodile clip or reverse action tweezers) on each leg as you solder them. Keep exposure to heat to a minimum (under 2 seconds). Ideally you should use a socket for the IC.

The striped leg (cathode) of the diodes go into the square pads.

The long leg (anode) of the electrolytic capacitors go into the square pads. C13 should lay flat to the PCB as shown on the main image to allow plenty of clearance when mounting in the enclosure.

You should solder all other board-mounted components before you solder the pots. Once they're in place you'll have no access to much of the underside of the board.

Snap the small metal tag off the pots so they can be mounted flush in the box.

If your pots don't have protective plastic covers you should place a strip of thick card between them and the board when soldering to keep them a good distance from the pcb to avoid shorting other components.

Pots mount on the back side of the board. You can use vertical-mount pots or just wire up 'normal' ones. It's a good idea to place the pots in their holes in the enclosure when you're soldering them in place on the PCB. That way you know they're going to line up ok. Best way to do it is to solder a single pin of each pot in place, then do a visual check to see that they're all sitting at the same height. If not, melt the joints and readjust any that are off.

The bottom of your board should look like this >>>>>>>

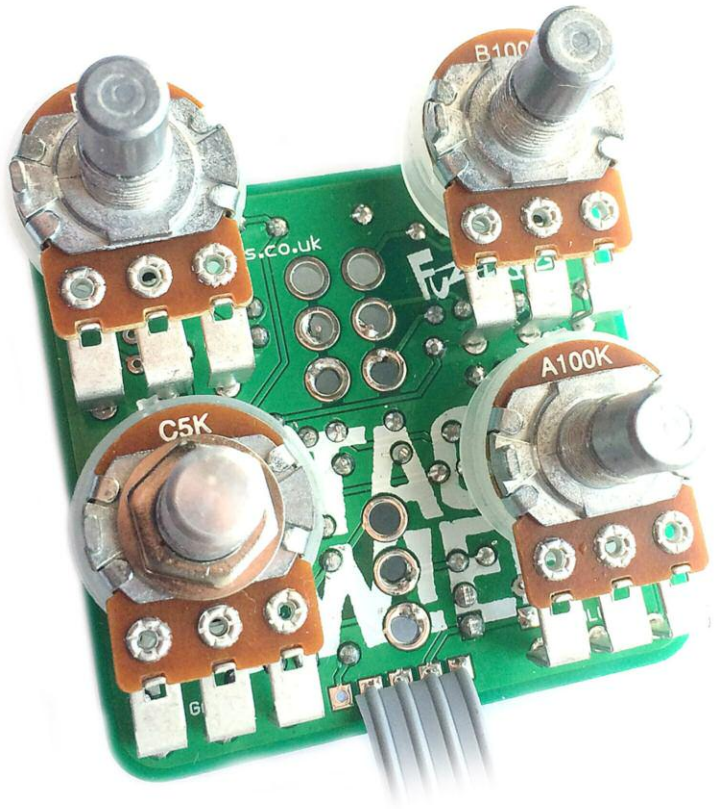

WHY ARE THERE HOLES FOR SWITCHES?

The top switch can change the connections of two sets of components to make them either Power Boost or Overdriver configuration. However, there are so many component value changes between the two circuits that it really doesn't give even a close approximation merely changing those two parts.

The bottom switch selects between 9V and 18V power if you're using the charge pump. Frankly, the Overdriver sounds best at 9V, the Power Boost at 18V, so its highly recommended you just hard wire for the appropriate voltage. If you really want to switch between the two, use the charge pump and put a SPDT ON-ON toggle in that space instead of the jumper wire.

Test the board!

Check the relevant daughterboard document for more info before you undertake this stage.

UNDER NO CIRCUMSTANCES will troubleshooting help be offered if you have skipped this stage. No exceptions.

Once you've finished the circuit it makes sense to test is before starting on the switch and LED wiring. It'll cut down troubleshooting time in the long run. If the circuit works at this stage, but it doesn't once you wire up the switch - guess what? You've probably made a mistake with the switch.

Solder some nice, long lengths of wire to the board connections for 9V, GND, IN and OUT. Connect IN and OUT to the jacks as shown. Connect all the GNDs together (twist them up and add a small amount of solder to tack it). Connect the battery + lead to the 9V wire, same method. Plug in. Go!

If you're using a ribbon cable you can tack the wires to the ends of that. It's a lot easier to take them off there than it is do desolder wires from the PCB pads.

If it works, carry on and do your switch wiring. If not... aw man. At least you know the problem is with the circuit. Find out why, get it working, THEN worry about the switch etc.

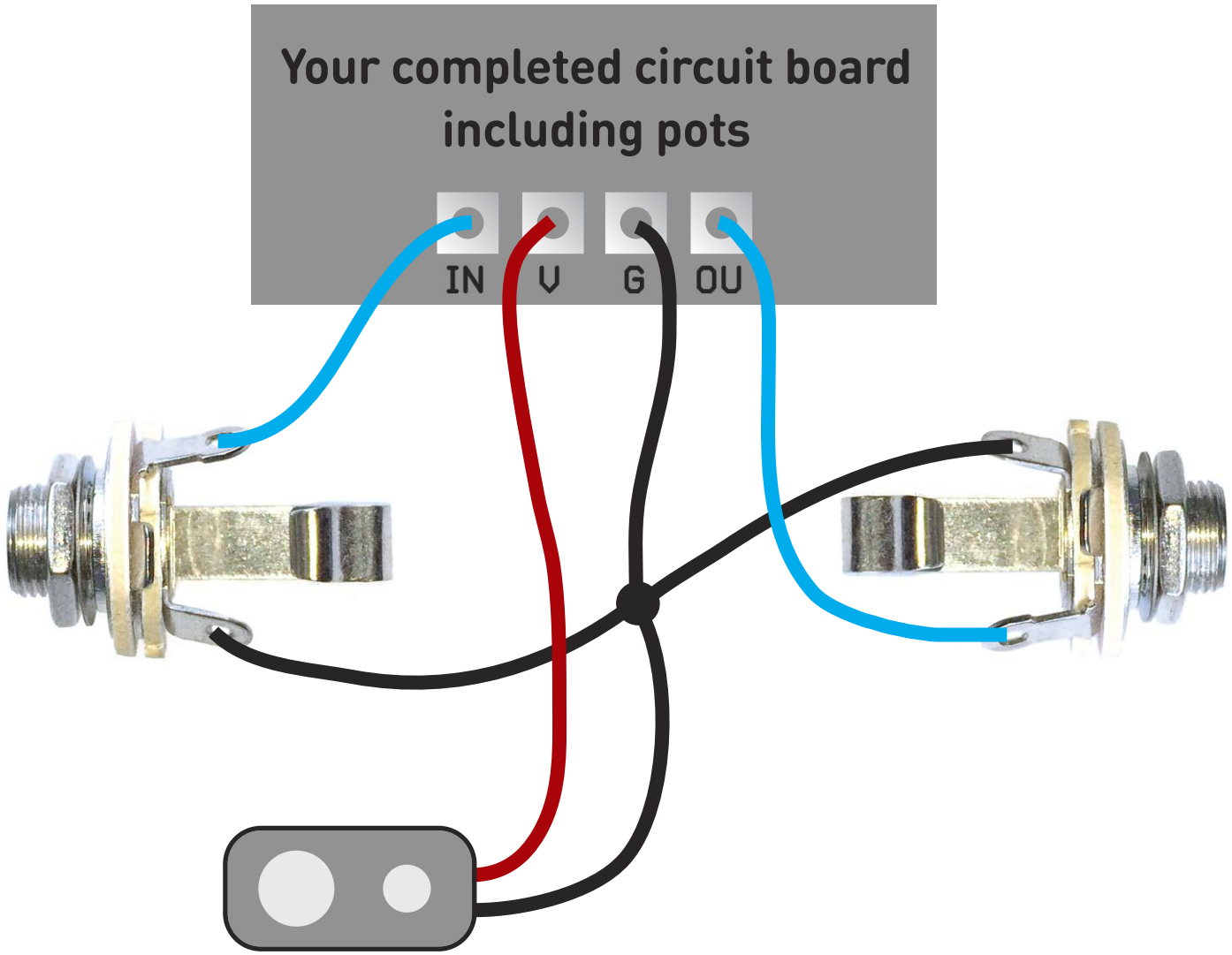

Wire it up - DC only version

(if using a daughterboard please refer to the relevant document)

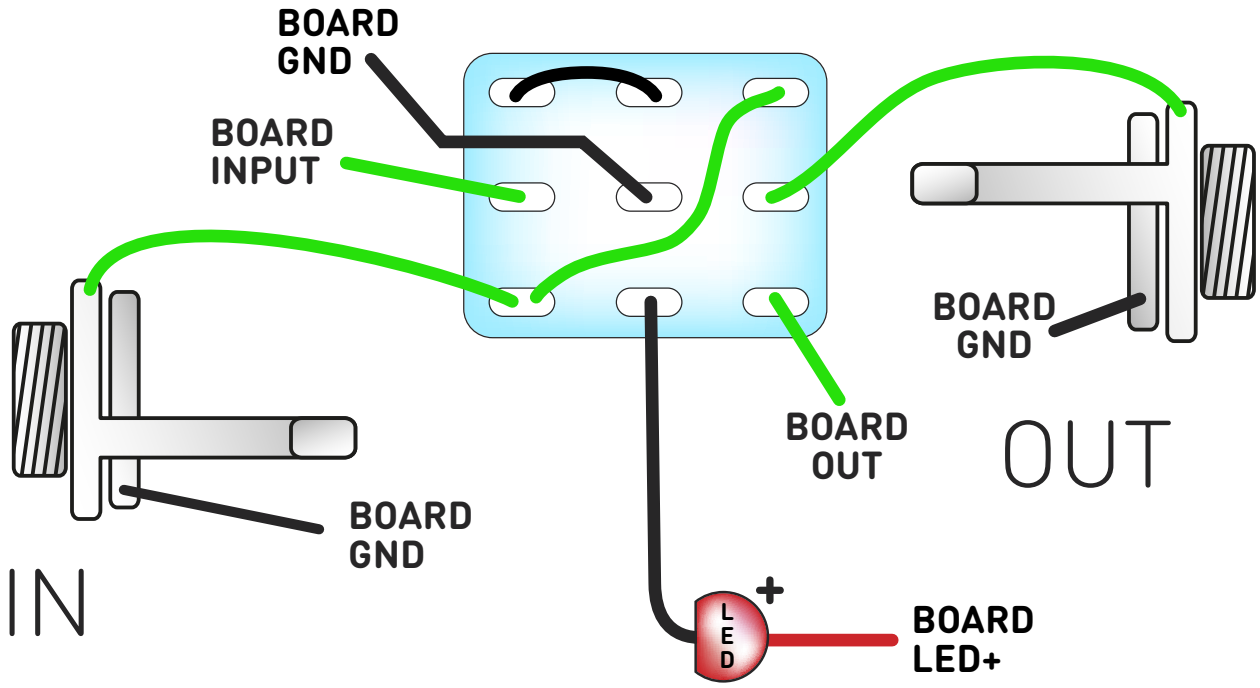

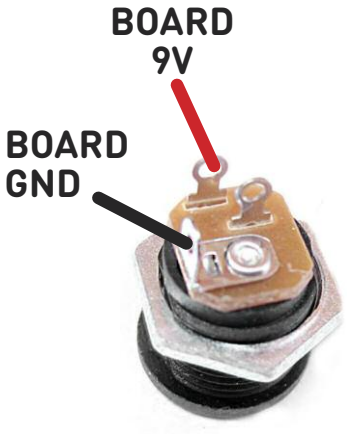

This circuit is standard, Negative GND. Your power supply should be Tip Negative / Sleeve Positive. That's the same as your standard pedals (Boss etc), and you can safely daisy-chain your supply to this pedal.

The BOARD GND connections don't all have to connect to one point. They can be daisy-chained around the circuit, using larger connection points (such as jack socket lugs) for multiple connections. As long as they all connect together in some way.

Wire it up - with battery

(if using a daughterboard please refer to the relevant document)

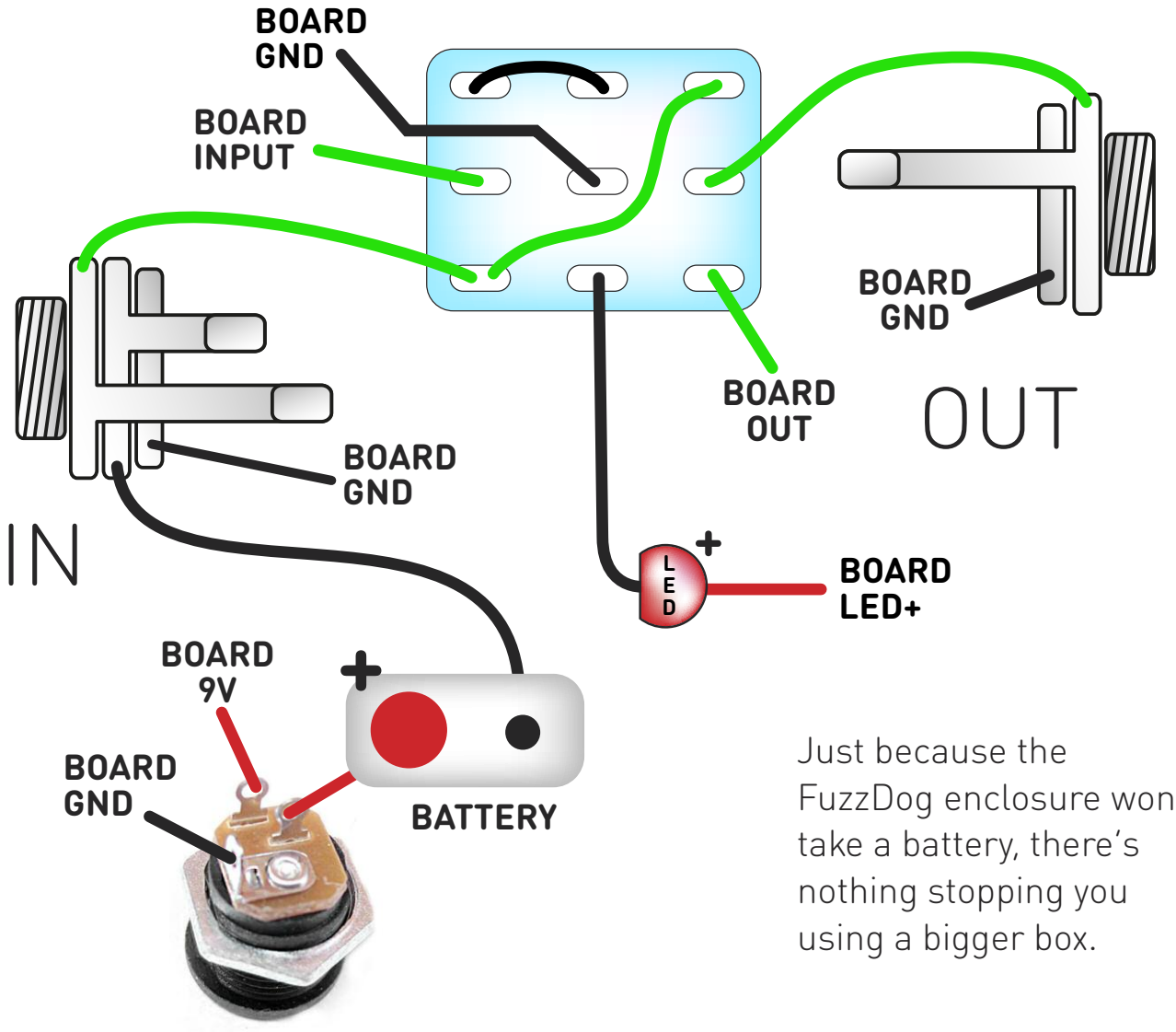

Just because the FuzzDog enclosure won't take a battery, there's nothing stopping you using a bigger box.

This circuit is standard, Negative GND. Your power supply should be Tip Negative / Sleeve Positive. That's the same as your standard pedals (Boss etc), and you can safely daisy-chain your supply to this pedal.

The BOARD GND connections don't all have to connect to one point. They can be daisy-chained around the circuit, using larger connection points (such as jack socket lugs) for multiple connections. As long as they all connect together in some way.

Drilling template

Hammond 1590B

60 x 111 x 31mm

Recommended drill sizes:

Pots	7mm
Jacks	10mm
Footswitch	12mm
DC Socket	12mm
Rotary Switch	9mm

It's a good idea to drill the holes for the pots 8mm to give yourself some wiggle room unless you're a drill ninja

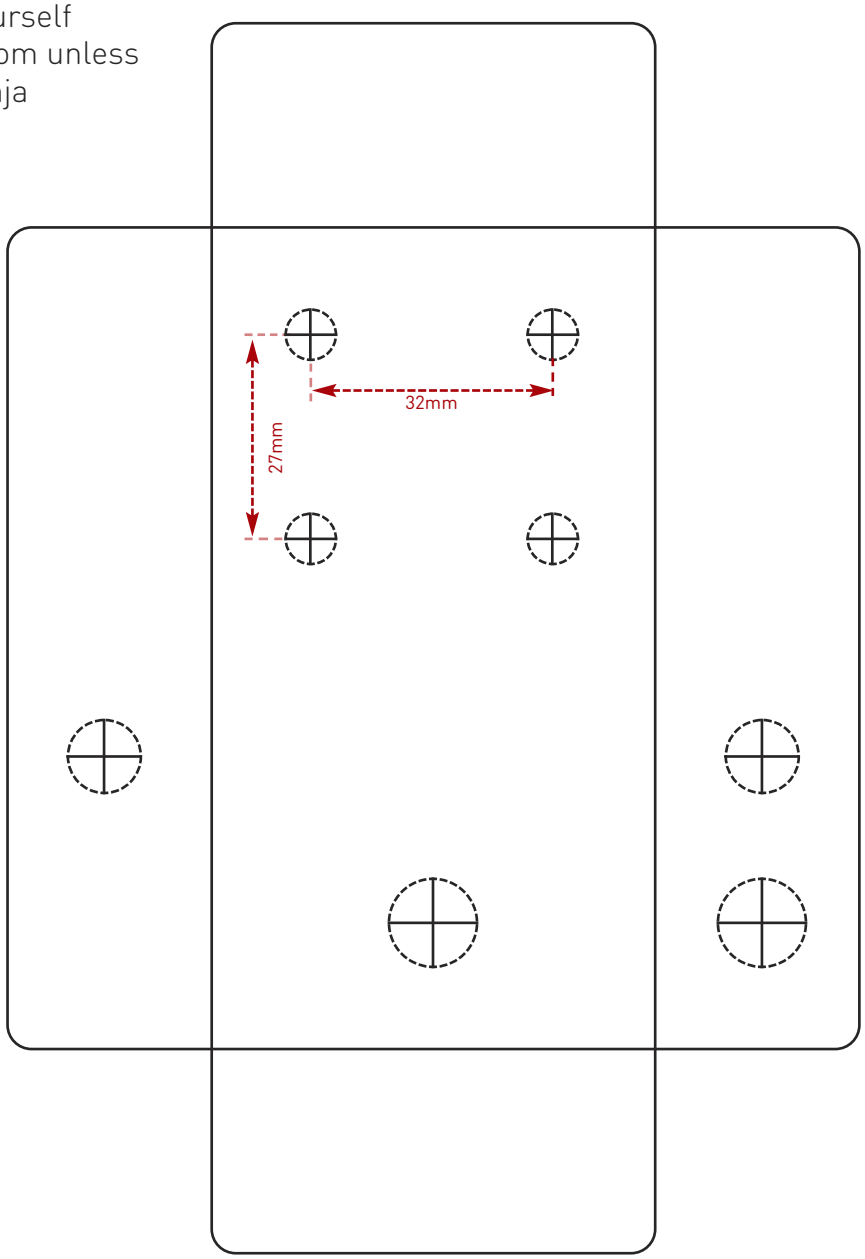

This template is a rough guide only. You should ensure correct marking of your enclosure before drilling. You use this template at your own risk.
Pedal Parts Ltd can accept no responsibility for incorrect drilling of enclosures.

FuzzDog.co.uk