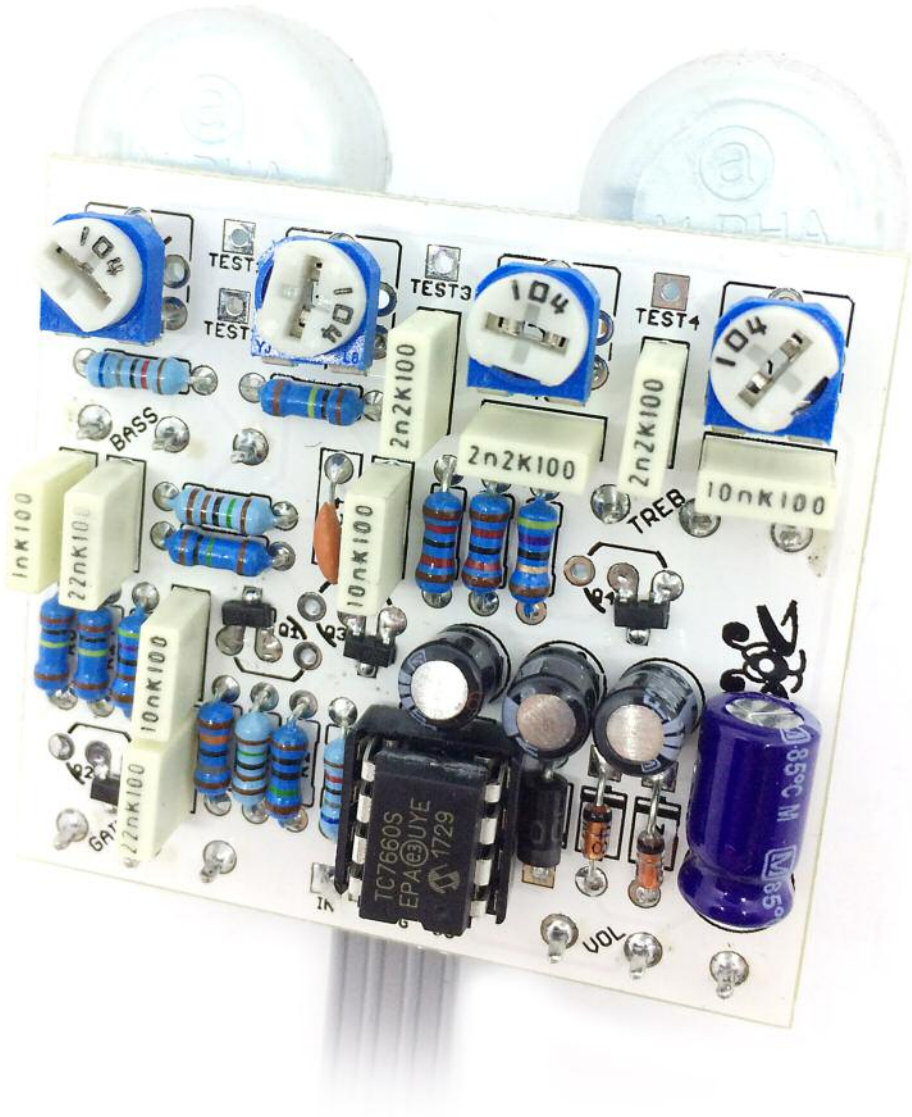

Two Dozen Drive

All the vintage fun stylings of a classic Silvertone amp

Important notes

If you're using any of our footswitch daughterboards, DOWNLOAD THE DAUGHTERBOARD DOCUMENT

- Download and read the appropriate build document for the daughterboard as well as this one BEFORE you start.
- DO NOT solder the supplied Current Limiting Resistor (CLR) to the main circuit board even if there is a place for it. This should be soldered to the footswitch daughterboard.

POWER SUPPLY

Unless otherwise stated in this document this circuit is designed to be powered with 9V DC.

COMPONENT SPECS

Unless otherwise stated in this document:

- Resistors should be 0.25W. You can use those with higher ratings but check the physical size of them.
- Electrolytics caps should be at least 25V for 9V circuits, 35V for 18V circuits. Again, check physical size if using higher ratings.

LAYOUT CONVENTIONS

Unless otherwise stated in this document, the following are used:

- **Electrolytic capacitors:**
  Long leg (anode) to square pad.
- **Diodes/LEDs:**
  Striped leg (cathode) to square pad. Short leg to square pad for LEDs.
- **ICs:**
  Square pad indicates pin 1.

Schematic + BOM

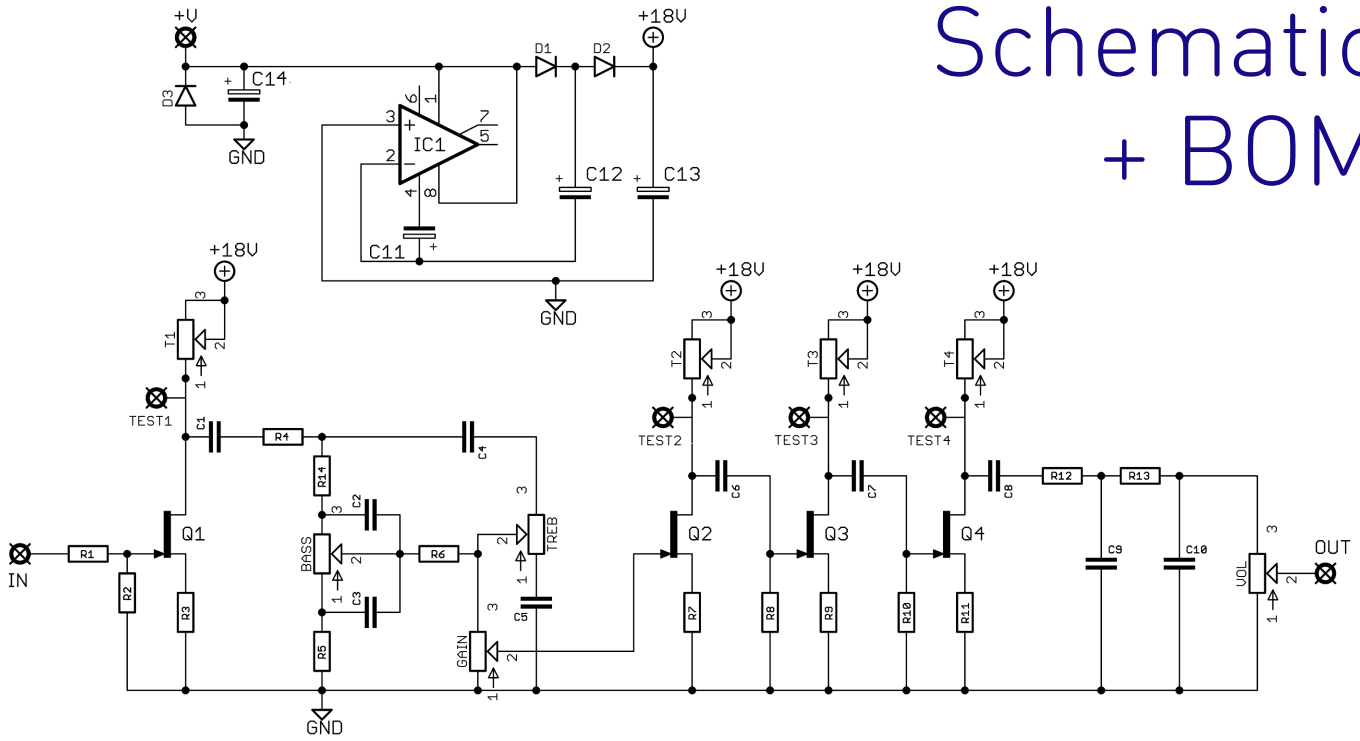

Values in green are our subsitutions for an altogether nicer result. Honest.

R1	68K	C1	22n	IC1	7660S
R2	10M	C2	1n (470p)		or MAX1044*
R3	1K5	C3	22n (10n)		
R4	180K	C4	680p	Q1-4	J201**
R5	68K (2K2)	C5	10n		
R6	100K	C6	10n	D1-2	1N4148/1N4001
R7	4K7 (2K2)	C7	10n	D3	1N4001
R8	1M	C8	2n2		
R9	1K5	C9	2n2	BASS	1MB (500KA)
R10	100K	C10	2n2	TREB	1MB (500KB)
R11	47R	C11	10u elec	GAIN	1MA
R12	12K	C12	10u elec	VOL	100KA
R13	12K	C13	47u elec		
R14	100K	C14	100u elec	T1-4	100K TRIM

*We tried several different charge pumps on this circuit and had best results from the MAX or the MicroChip 7660SEPA. At higher gain settings with other variations of the 7660 there was an audible whine present. If you're not using a charge pump leave out the parts listed in blue.

**Use through hole or SMD parts (MMBFJ201), not both!

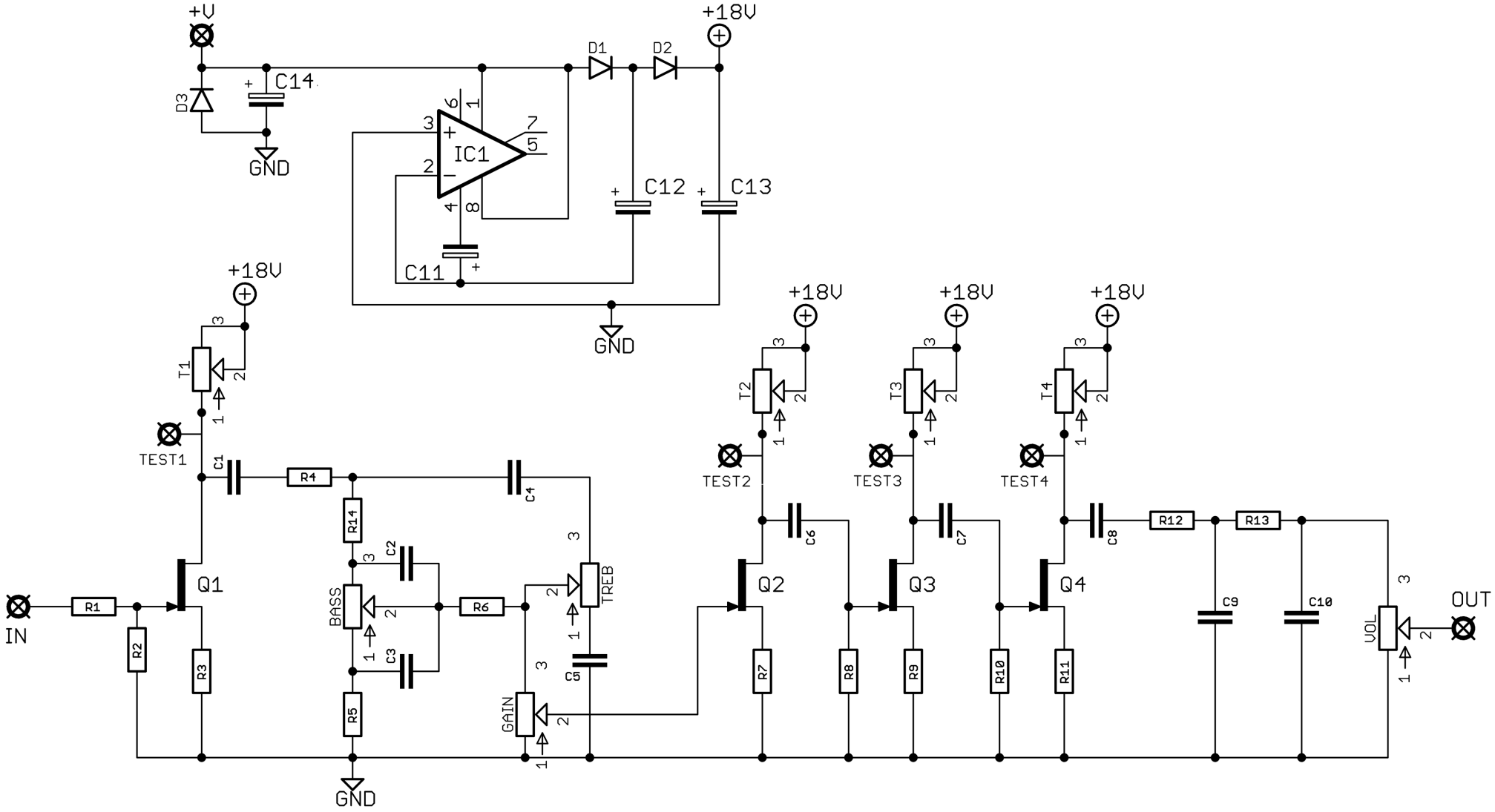
+V
D3
C14
GND
+18V
D1
D2
IC1
C12
C13
C11
GND
+18V
T1
TEST1
C1
R4
R14
C2
C3
R5
BASS
R6
C4
TREB
C5
GAIN
GND
IN
R1
R2
R3
Q1
+18V
T2
TEST2
C6
Q2
R7
R8
+18V
T3
TEST3
C7
Q3
R9
R10
+18V
T4
TEST4
C8
Q4
R11
R12
R13
C9
C10
VOL
OUT

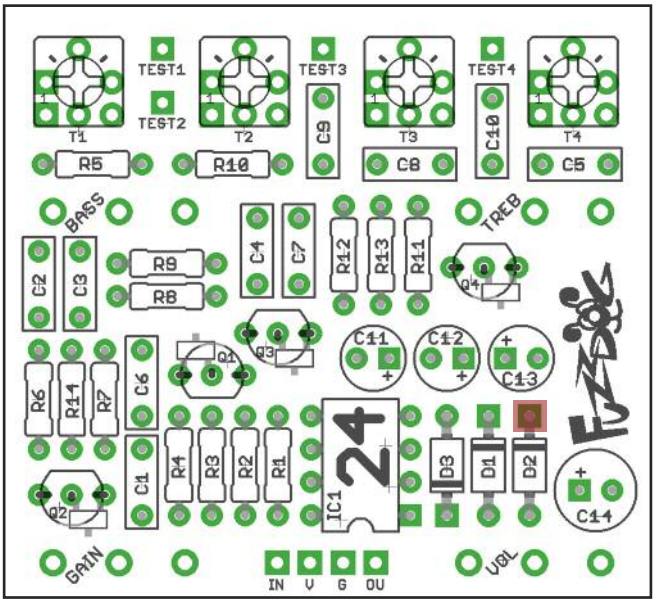

PCB layout ©2017 Pedal Parts Ltd.

The power and signal pads on the PCB conform to the FuzzDog Direct Connection format, so can be paired with the appropriate daughterboard for quick and easy offboard wiring. Check the separate daughterboard document for details.

Be very careful when soldering the diodes and FETs. They're very sensitive to heat. You should use some kind of heat sink (crocodile clip or reverse action tweezers) on each leg as you solder them. Keep exposure to heat to a minimum (under 2 seconds).

It's best to use a socket for the IC unless you're confident you can avoid frying it.

Positive (anode) legs of the electrolytic caps go to the square pads.

Negative (cathode) legs of the diodes go to the square pads.

Snap the small metal tag off the pots so they can be mounted flush in the box.

Solder the pots last, as once they're in place you'll have no access to the pads beneath them.The best way to get the pots lined up is to first solder one pin of each.

Once they're tacked in place adjust them so they're straight and check to see if the heights line up. If not, melt that soldered joint and adjust. Once you're happy all the pots are aligned you can solder in the other legs.

BIASING

When you're ready to test you need to bias the FETs. We've included test pads for each FET to make it easier. Using a multimeter set to DC Voltage, place your common lead on a ground point, and the positive lead on the cathode of D2 shown in red above. This is the voltage you're getting from the charge pump. Now measure the voltage on Test Point 1. Turn T1 until you get a reading of approximately half your charge pump voltage, then turn it down by 0.25V. Repeat with Test 2/T2 etc. It doesn't have to be exact. Close to half is fine.

For Q4 it's best to do it by ear. Adjust until it jumps in volume and noise, then turn it back down to the point the noise disappears and everything sounds good. Trust your ears over the numbers for Q4.

GOT 18V?

If you have an 18V power supply you're better off using that than relying on the charge pump.

Leave out the parts listed in blue on the previous page and add a jumper between the pads for D1 and D2 as shown:

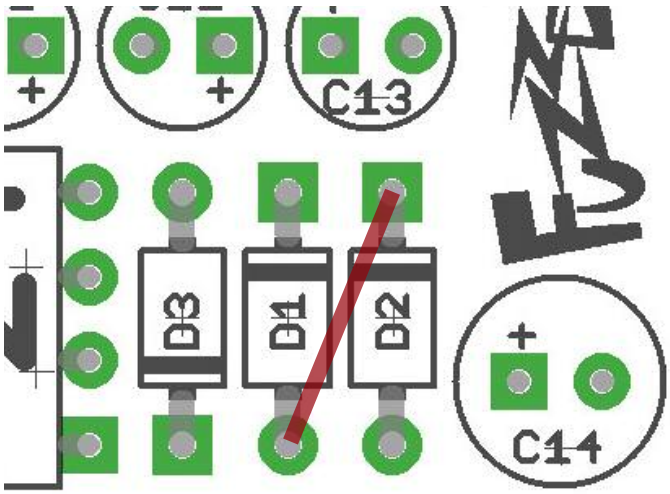

Test the board!

Check the relevant daughterboard document for more info before you undertake this stage.

UNDER NO CIRCUMSTANCES will troubleshooting help be offered if you have skipped this stage. No exceptions.

Once you've finished the circuit it makes sense to test is before starting on the switch and LED wiring. It'll cut down troubleshooting time in the long run. If the circuit works at this stage, but it doesn't once you wire up the switch - guess what? You've probably made a mistake with the switch.

Solder some nice, long lengths of wire to the board connections for 9V, GND, IN and OUT. Connect IN and OUT to the jacks as shown. Connect all the GNDs together (twist them up and add a small amount of solder to tack it). Connect the battery + lead to the 9V wire, same method. Plug in. Go!

If you're using a ribbon cable you can tack the wires to the ends of that. It's a lot easier to take them off there than it is do desolder wires from the PCB pads.

If it works, carry on and do your switch wiring. If not... aw man. At least you know the problem is with the circuit. Find out why, get it working, THEN worry about the switch etc.

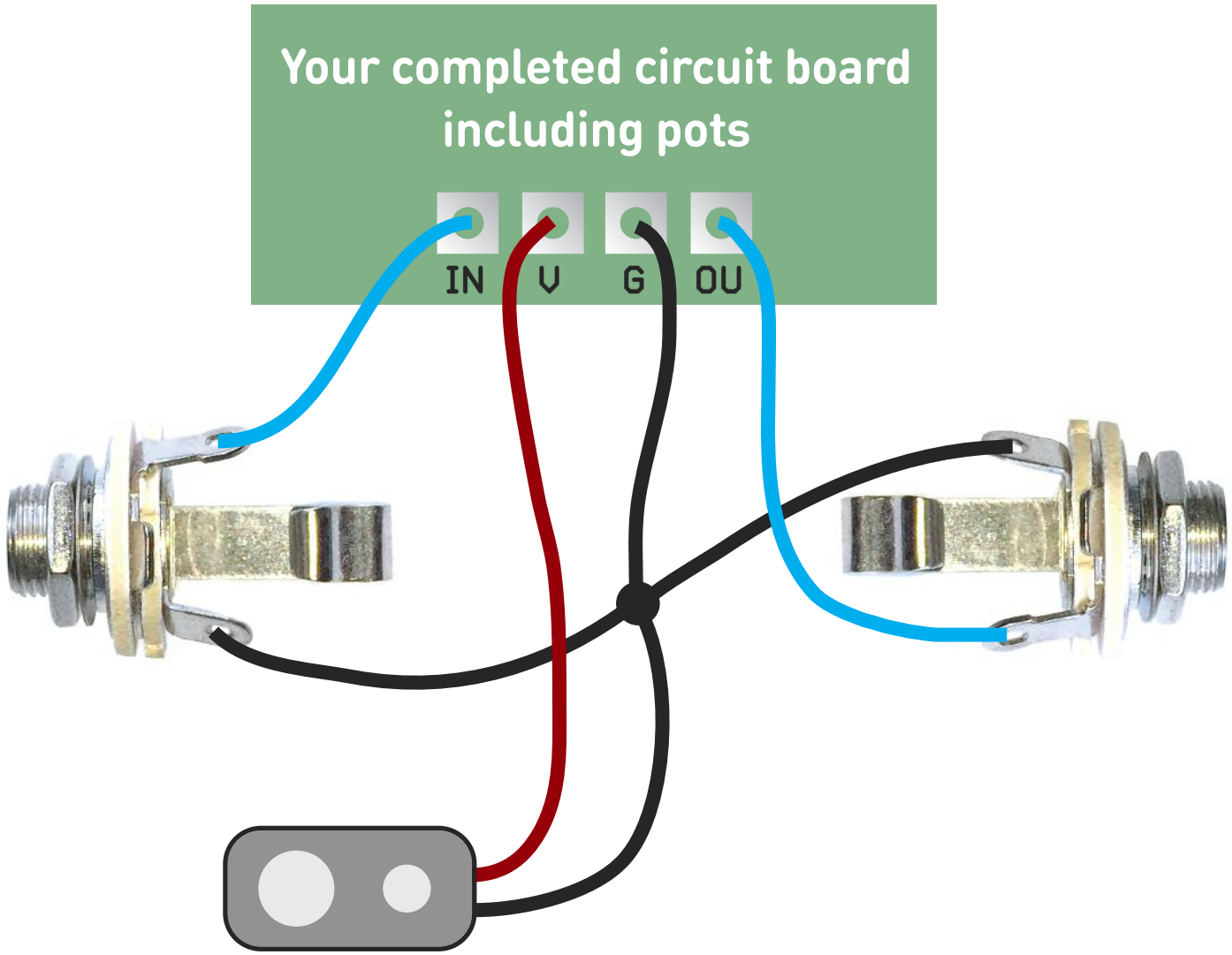

Wire it up (if using a daughterboard please refer to the relevant document)

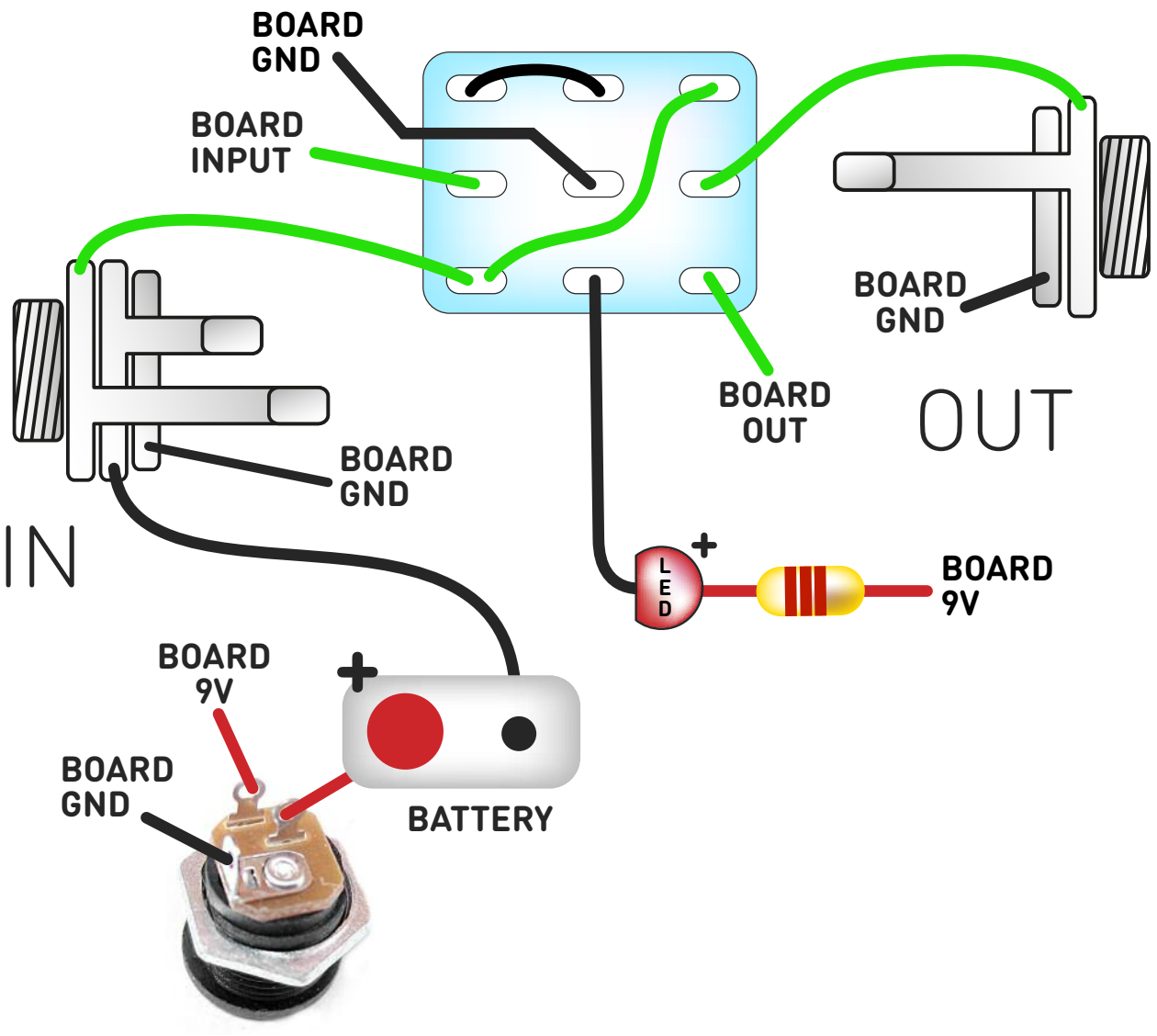

Wiring shown above will disconnect the battery when you remove the jack plug from the input, and also when a DC plug is inserted.

The Board GND connections don't all have to directly attach to the board. You can run a couple of wires from the DC connector, one to the board, another to the IN jack, then daisy chain that over to the OUT jack.

It doesn't matter how they all connect, as long as they do.

This circuit is standard, Negative GND. Your power supply should be Tip Negative / Sleeve Positive. That's the same as your standard pedals (Boss etc), and you can safely daisy-chain your supply to this pedal.

Drilling template

Hammond 1590B

60 x 111 x 31mm

It's a good idea to drill the pot and toggle switch holes 1mm bigger if you're board-mounting them.
Wiggle room = good!

Recommended drill sizes:

Pots	7mm
Jacks	10mm
Footswitch	12mm
DC Socket	12mm
Toggle switches	6mm

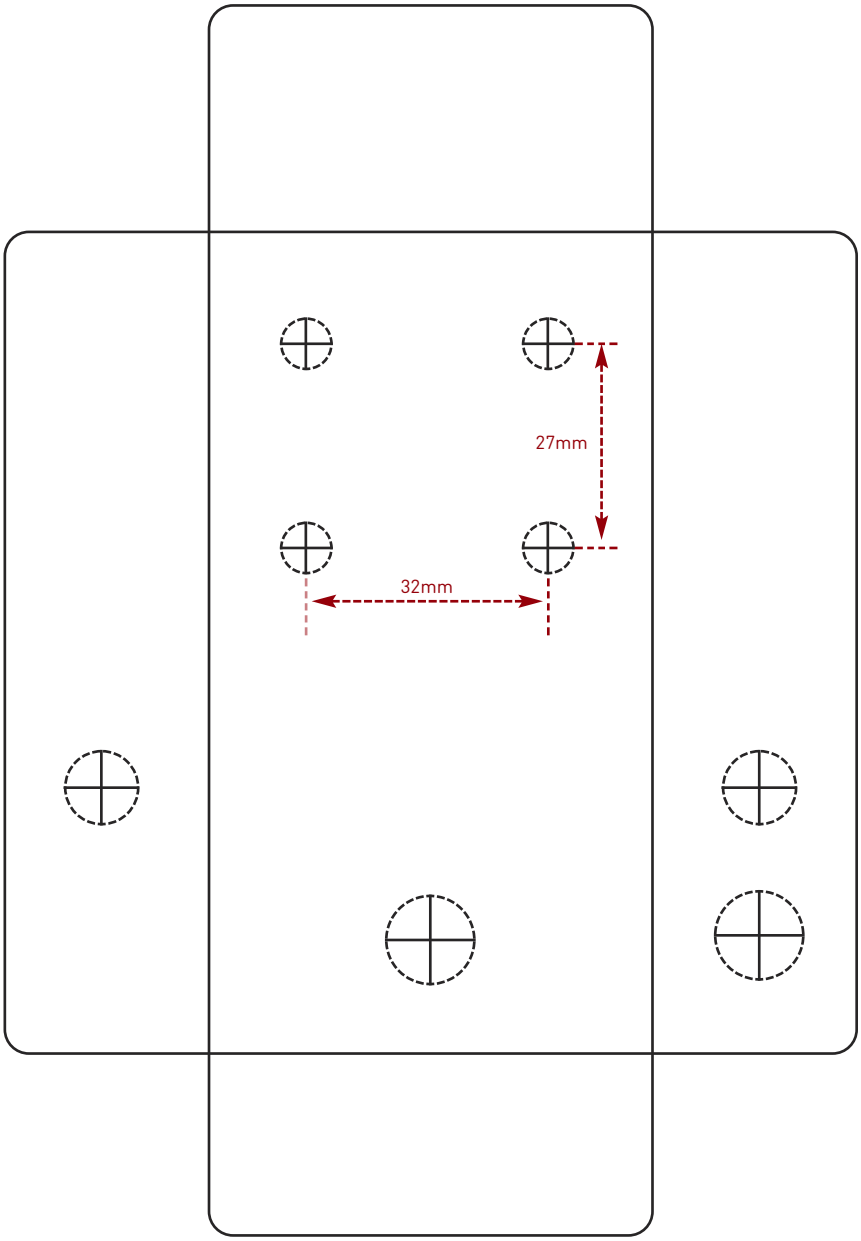

This template is a rough guide only. You should ensure correct marking of your enclosure before drilling. You use this template at your own risk.
Pedal Parts Ltd can accept no responsibility for incorrect drilling of enclosures.

FuzzDog.co.uk