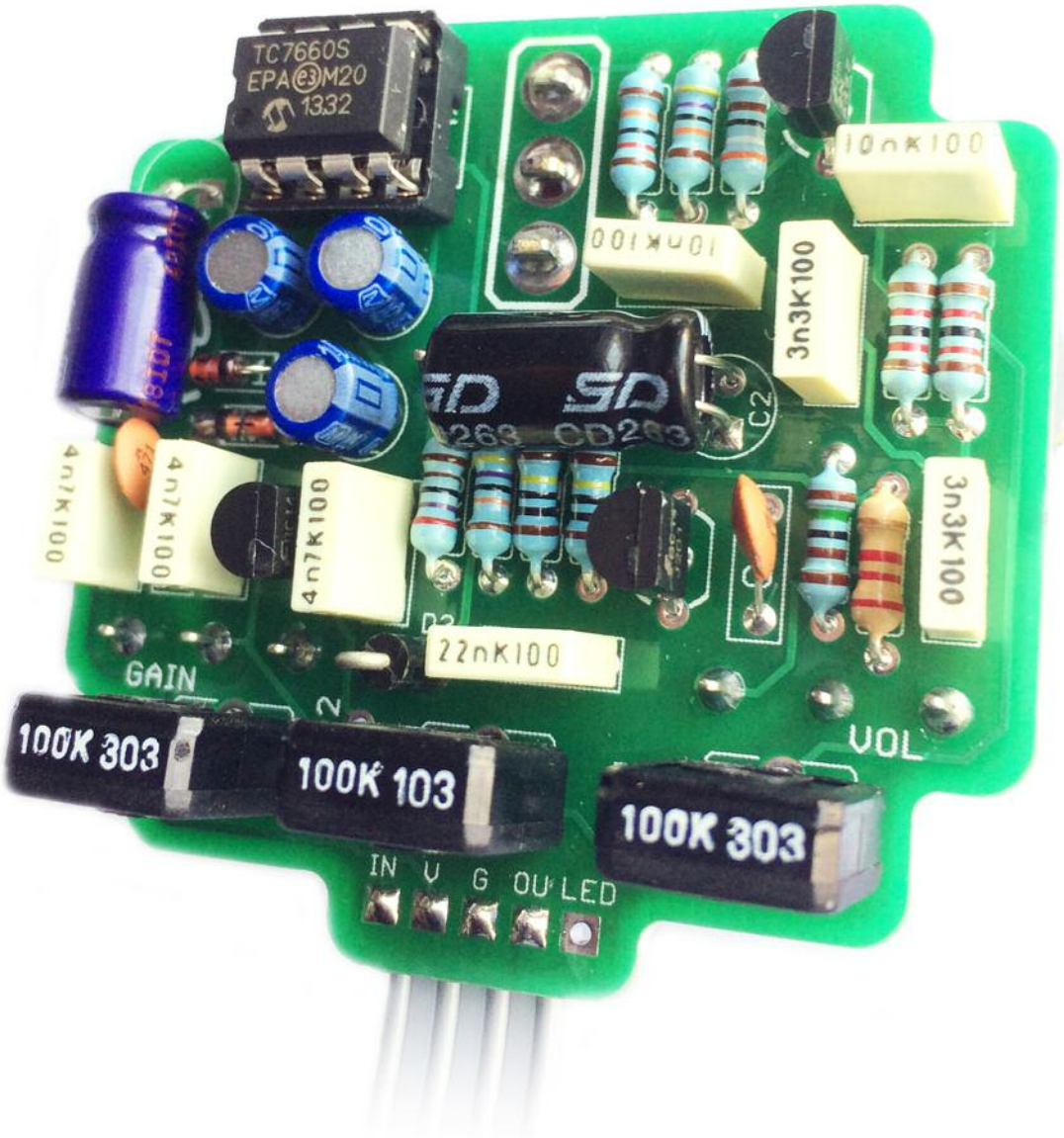

Supreaux Bolt

Boutique 18V version of the ROG Supro Amp Tone Shaper

Schematic

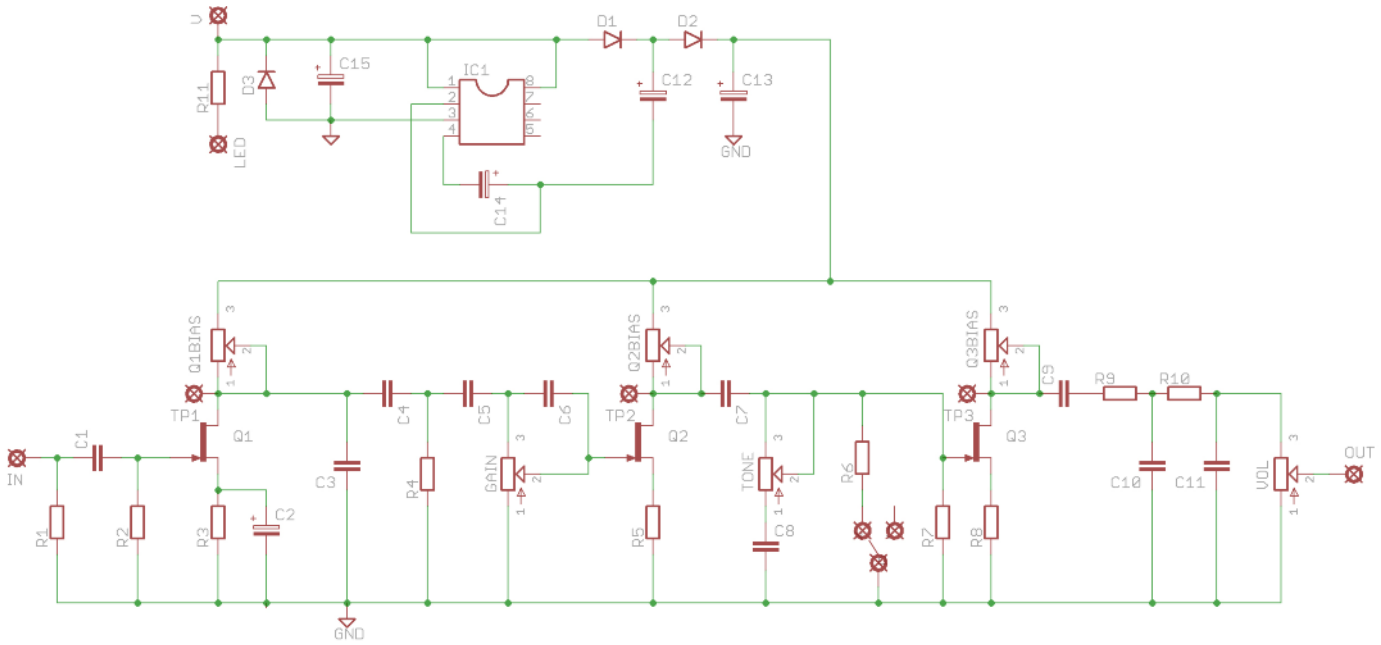

BOM

R1	1M
R2	1M
R3	1K5
R4	470K
R5	2K7
R6	120K
R7	470K
R8	220R
R9	12K
R10	12K
R11	2K2 (CLR)

C1	22n
C2	33u elec
C3	470p
C4	4n7
C5	4n7
C6	470p
C7	10n
C8	4n7
C9	10n
C10	3n3
C11	3n3
C12	10u elec
C13	10u elec
C14	10u elec
C15	100u elec

Q1,2	J201
Q3	2N5457
IC1	7660S
D1,2	1N4148
D3	1N4001
TONE	500KA
VOL	100KA
GAIN	500KA
T1,2,3	100K Trim
SWITCH	SPDT ON-ON

Parts listed in blue are for the 18V charge pump. If you want to run the circuit at 9V like the RunOffGroove original, or use an 18V supply, leave these out and check the notes later in the document for jumper placement.

The power and signal pads on the PCB conform to the FuzzDog Direct Connection format, so can be paired with the appropriate daughterboard for quick and easy offboard wiring.

Be very careful when soldering the diodes, LED and transistors. They're very sensitive to heat. You should use some kind of heat sink (crocodile clip or reverse action tweezers) on each leg as you solder them. Keep exposure to heat to a minimum (under 2 seconds).

The striped leg (cathode) of the diodes go into the square pads.

The long leg (anode) of the electrolytic capacitors go into the square pads. The large 100u and 33u capacitors should lay flat over the other components as shown in the image on the first page. This will give you plenty of clearance in the enclosure.

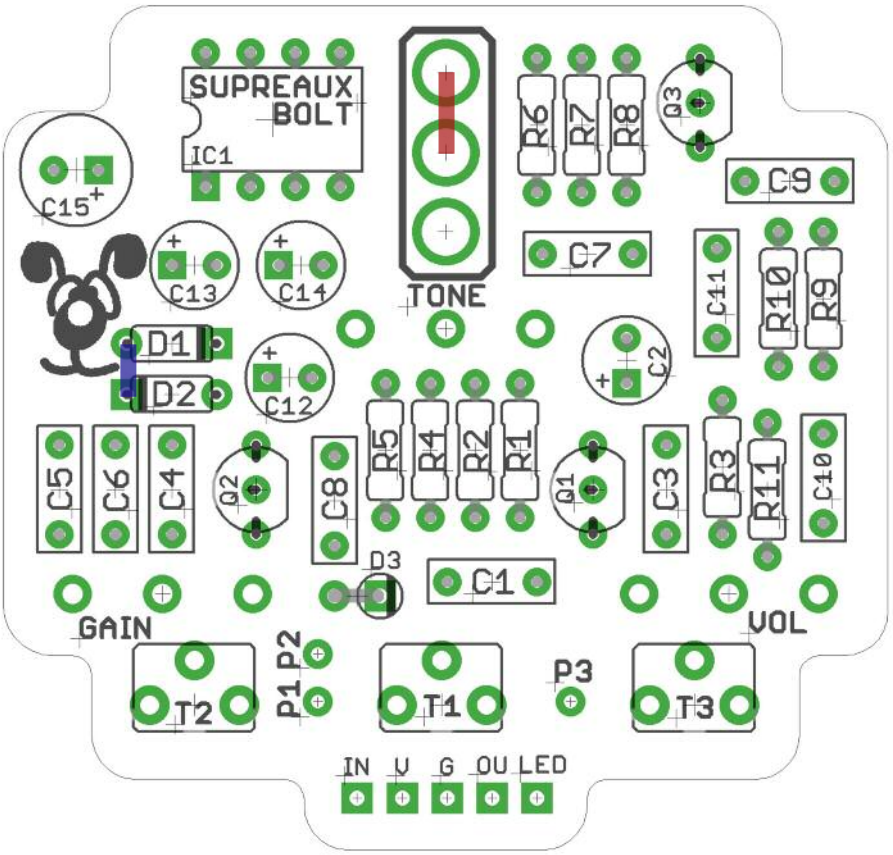

PCB Layout ©2015 Pedal Parts Ltd.

Snap the small metal tag off the pots so they can be mounted flush in the box.

Pot mounts on the back side of the board. You can use vertical-mount pots or just wire up 'normal' ones. It's a good idea to place the pots in their holes in the enclosure when you're soldering them in place on the PCB. That way you know they're going to line up ok. Best way to do it is to solder a single pin of each pot in place, then do a visual check to see that they're all sitting at the same height. If not, melt the joints and readjust any that are off.

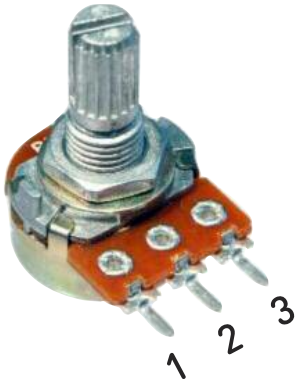

Similarly, for the toggle switch it's best to solder a single lug then check it for position. If not straight or flat, melt the joint and reposition before soldering the other two lugs.

If your pots don't have protective plastic covers you should place a strip of thick card between them and the board when soldering to keep them a good distance from the pcb to avoid shorting other components.

You should solder all other board-mounted components before you solder the pots. Once they're in place you'll have no access to much of the underside of the board.

Pots should be placed as shown >>>

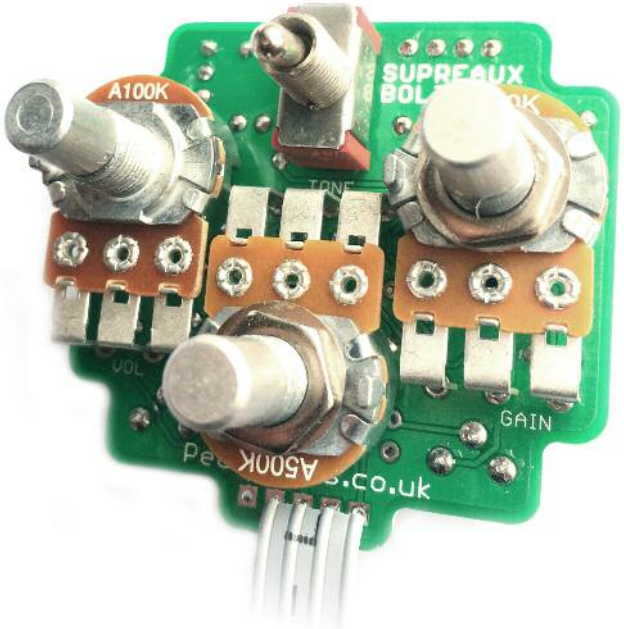

To make a circuit more like the original RunOffGroove Supreaux, omit the toggle switch and add a jumper as shown in red above. Leave out all the charge pump components as detailed on page 2, and place a jumper as shown in blue above.

To run the circuit from an 18V supply rather than the charge pump, leave all the pump components out and add the jumper shown in blue above.

Biasing

Once assembled, power up the circuit and adjust the trimmers to bias the FETS correctly. Test points (T1-3)have been added to the PCB to make this easier.

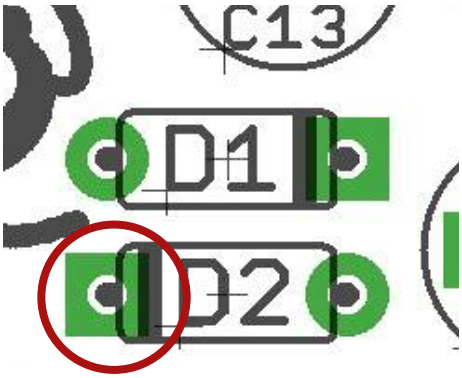

Set your multimeter for DC Voltage, 20V range. Connect your negative test lead to any ground point.

Now, check what your supply voltage is by putting your positive test lead on the cathode of D2 (circled in red, right).

You now need to adjust your trim pots to get half that supply voltage on each test point. So, if you're getting a supply reading of 18V, you should be looking for a 9V reading on your test points.

Place your positive test lead on pad P1, then adjust trimmer T1 until you get the correct voltage reading. Repeat the process with pad P2/trimmer T2 and pad 3/trimmer T3.

That's it. You'r ready to go.

Test the board!

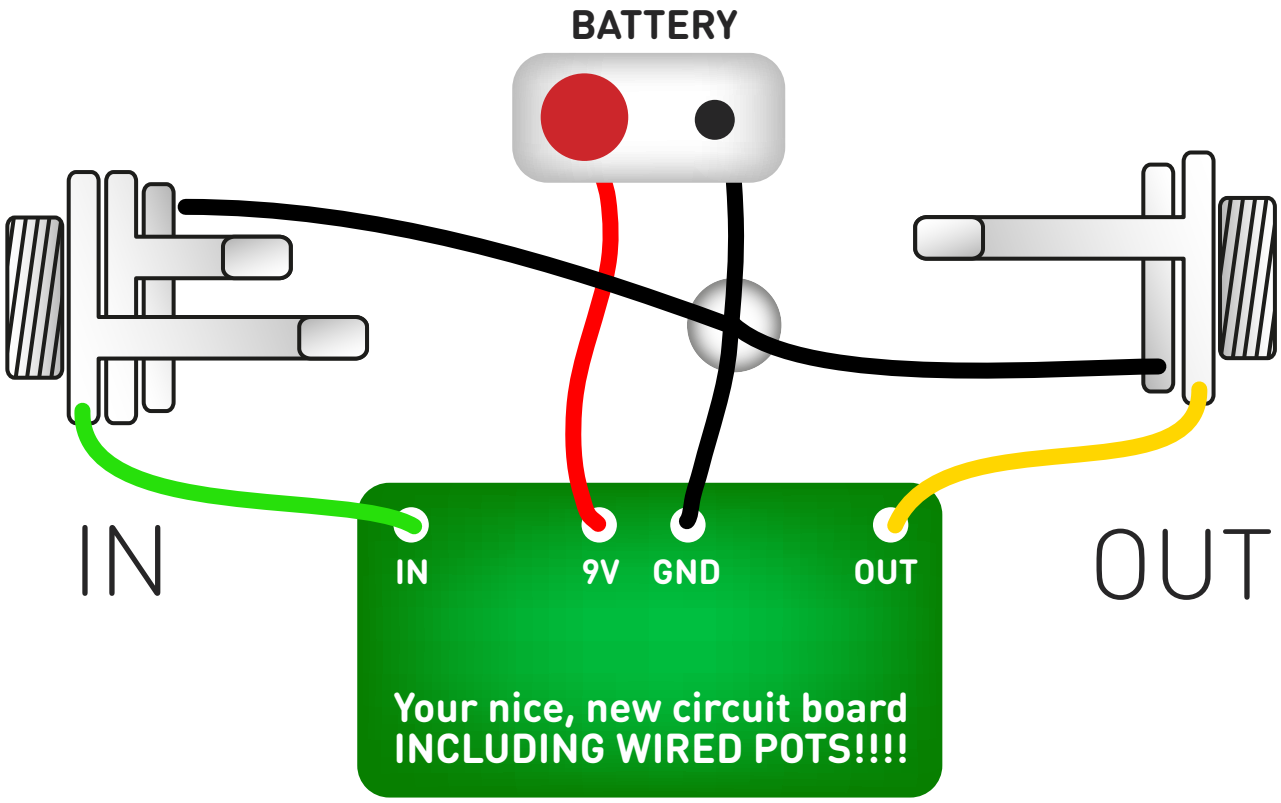

UNDER NO CIRCUMSTANCES will troubleshooting help be offered if you have skipped this stage. No exceptions.

Once you've finished the circuit it makes sense to test is before starting on the switch and LED wiring. It'll cut down troubleshooting time in the long run. If the circuit works at this stage, but it doesn't once you wire up the switch - guess what? You've probably made a mistake with the switch.

Solder some nice, long lengths of wire to the board connections for 9V, GND, IN and OUT. Connect IN and OUT to the jacks as shown. Connect all the GNDs together (twist them up and add a small amount of solder to tack it). Connect the battery + lead to the 9V wire, same method. Plug in. Go!

If it works, crack on and do your switch wiring. If not... aw man.
At least you know the problem is with the circuit. Find out why, get it working, THEN worry about the switch etc.

Wire it up - DC only version

(if using a daughterboard please refer to the relevant document)

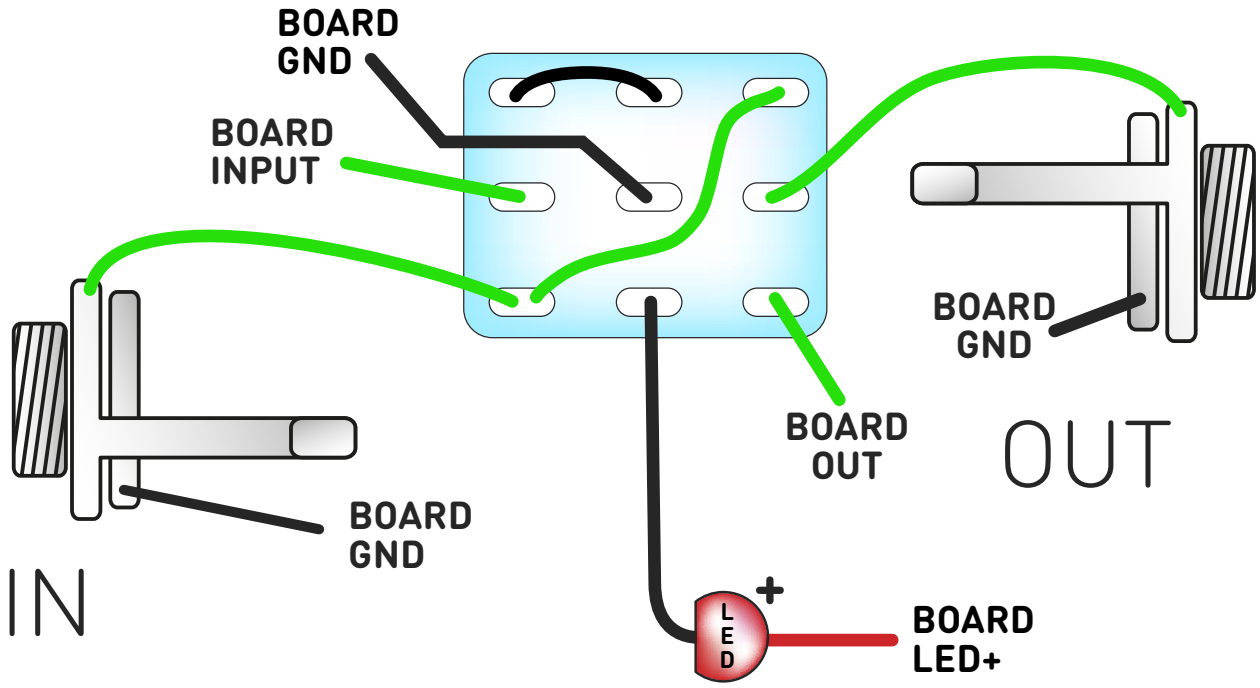

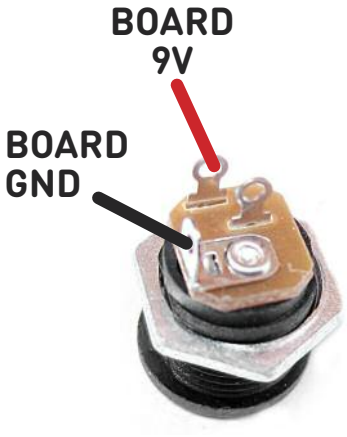

This circuit is standard, Negative GND. Your power supply should be Tip Negative / Sleeve Positive. That's the same as your standard pedals (Boss etc), and you can safely daisy-chain your supply to this pedal.

The BOARD GND connections don't all have to connect to one point. They can be daisy-chained around the circuit, using larger connection points (such as jack socket lugs) for multiple connections. As long as they all connect together in some way.

Wire it up - with battery

(if using a daughterboard please refer to the relevant document)

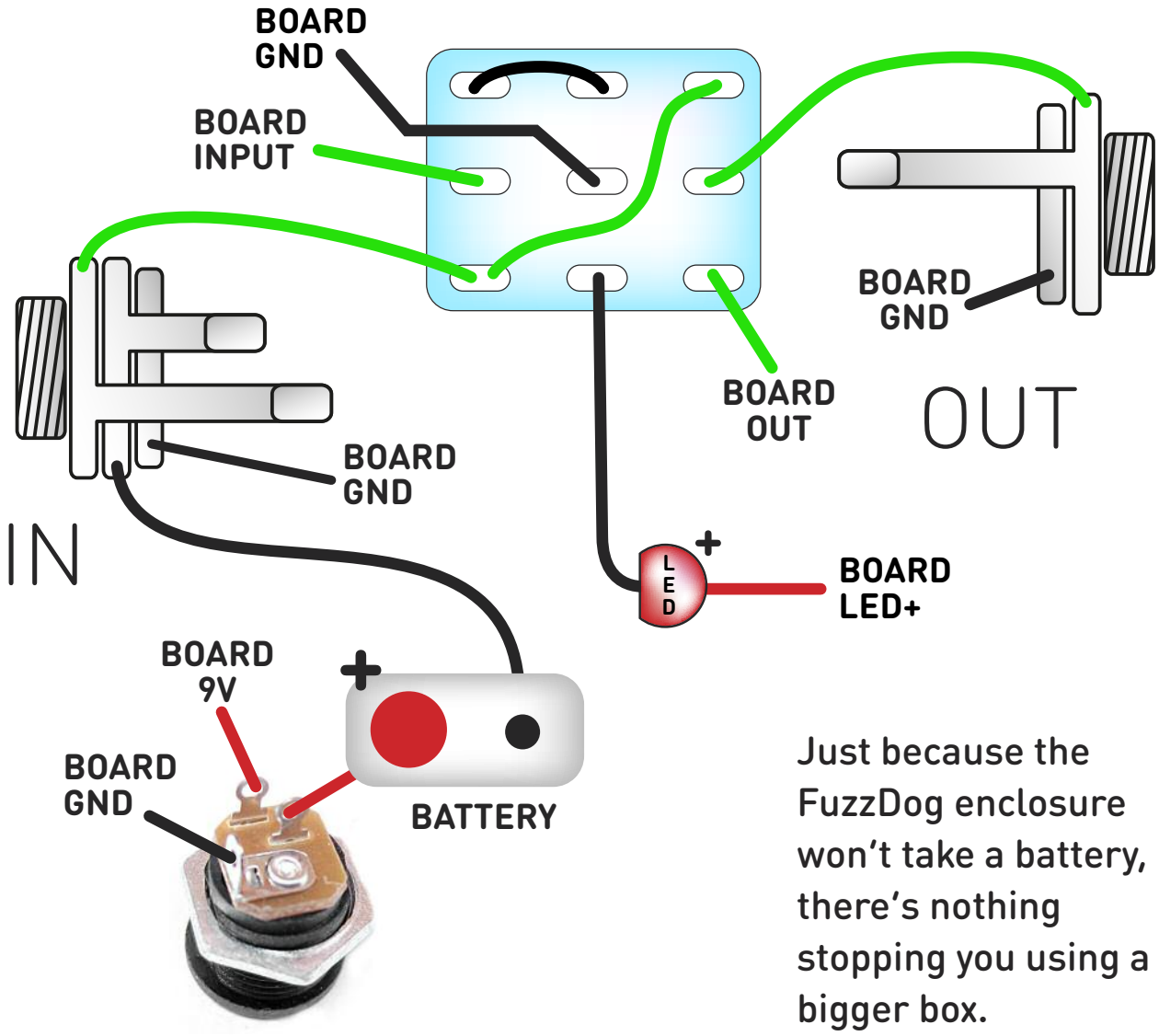

Just because the FuzzDog enclosure won't take a battery, there's nothing stopping you using a bigger box.

This circuit is standard, Negative GND. Your power supply should be Tip Negative / Sleeve Positive. That's the same as your standard pedals (Boss etc), and you can safely daisy-chain your supply to this pedal.

The BOARD GND connections don't all have to connect to one point. They can be daisy-chained around the circuit, using larger connection points (such as jack socket lugs) for multiple connections. As long as they all connect together in some way.

Drilling template

Supreaux Bolt

Hammond 1590B

60 x 111 x 31mm

Recommended drill sizes:

Pots	7mm
Jacks	10mm
Footswitch	12mm
DC Socket	12mm
Toggle Switch	6-7mm

It's a good idea to drill the holes for the pots 8mm to give yourself some wiggle room unless you're a drill ninja

Switch hole can be in line with the top pots or a little further down if you prefer.

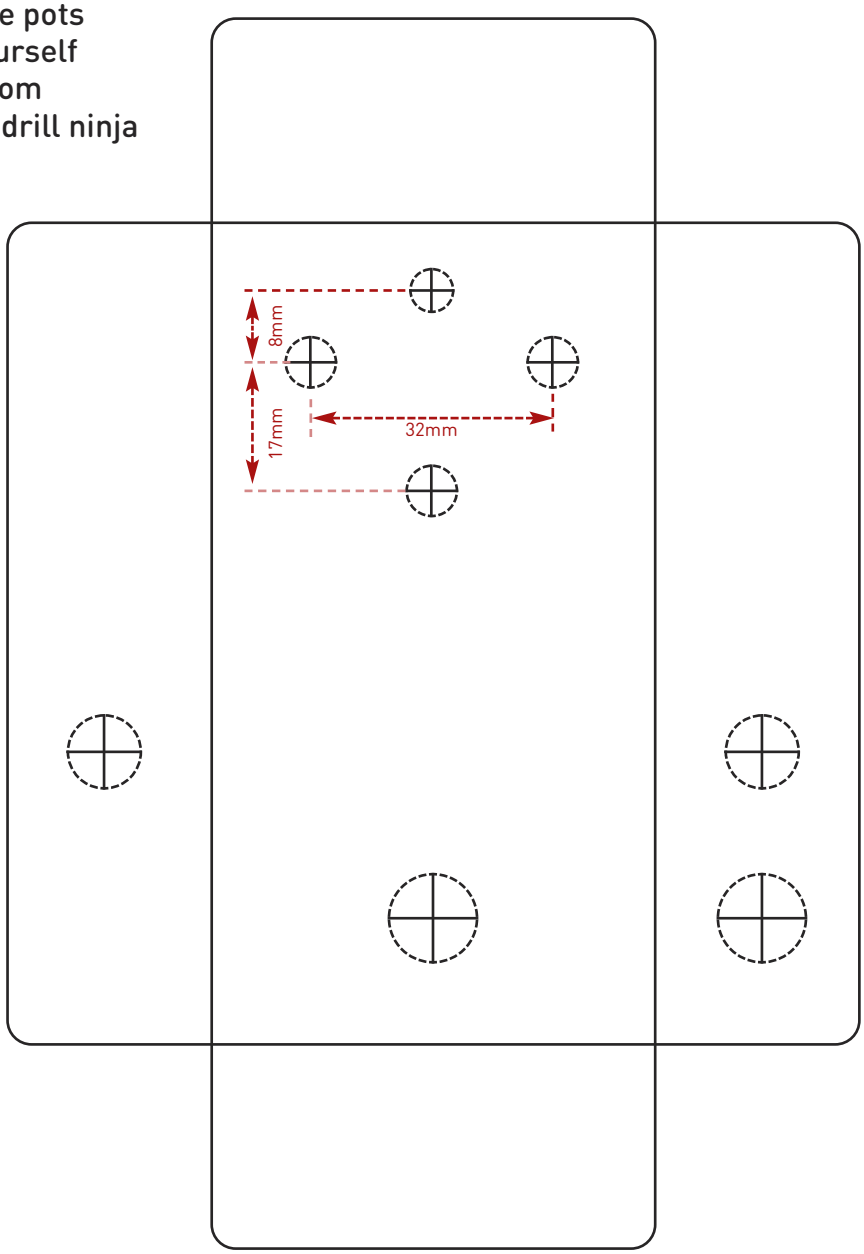

This template is a rough guide only. You should ensure correct marking of your enclosure before drilling. You use this template at your own risk.
Pedal Parts Ltd can accept no responsibility for incorrect drilling of enclosures.

PedalParts.co.uk