Stinky Cheese

Full-on fuzz with four-way tone shaping switch

Contents of this document are ©2015 Pedal Parts Ltd.
No reproduction permitted without the express written permission of Pedal Parts Ltd. All rights reserved.

Schematic

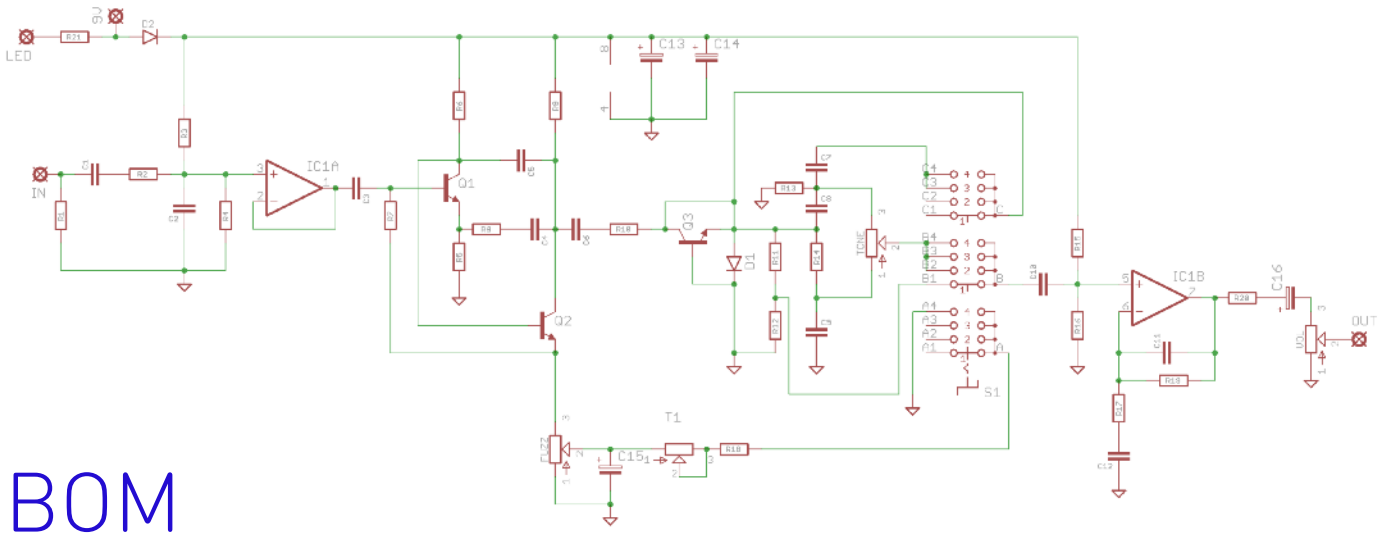

BOM

Alterations have been made to the output stage of the op amp circuit to increase volume as the original was a bit lacking. Thanks to Plesur and his Feta Complis document for those details.

R1	4M7
R2	1K
R3	680K
R4	680K
R5	470R
R6	100K
R7	100K
R8	470K
R9	10K
R10	47K
R11	47K
R12	47K
R13	47K
R14	47K
R15	680K
R16	680K
R17	15K
R18	1K
R19	33K
R20	470R
R21	2K2 (CLR)*

C1	47n
C2	1n5
C3	47n
C4	47n
C5	47p
C6	47n
C7	6n8
C8	2n2
C9	10n
C10	47n
C11	100p
C12	100n
C13	22u elec
C14	22u elec
C15	4u7 elec
C16	4u7 elec

Q1-3	2N3904
IC1	TL072
D1	1N4148
D2	1N4001
FUZZ	1KB
VOL	10KA
TONE	100KB
T1	1K Trim
SWITCH	3P4T Rotary

*If using a footswtich daughterboard you should solder R21 in the CLR position on that instead of the main PCB.

Do not solder in Q2 until you read the notes on page 4 regarding the small hack required to get the circuit working. Oops!

The power and signal pads on the PCB conform to the FuzzDog Direct Connection format, so can be paired with the appropriate daughterboard for quick and easy offboard wiring.

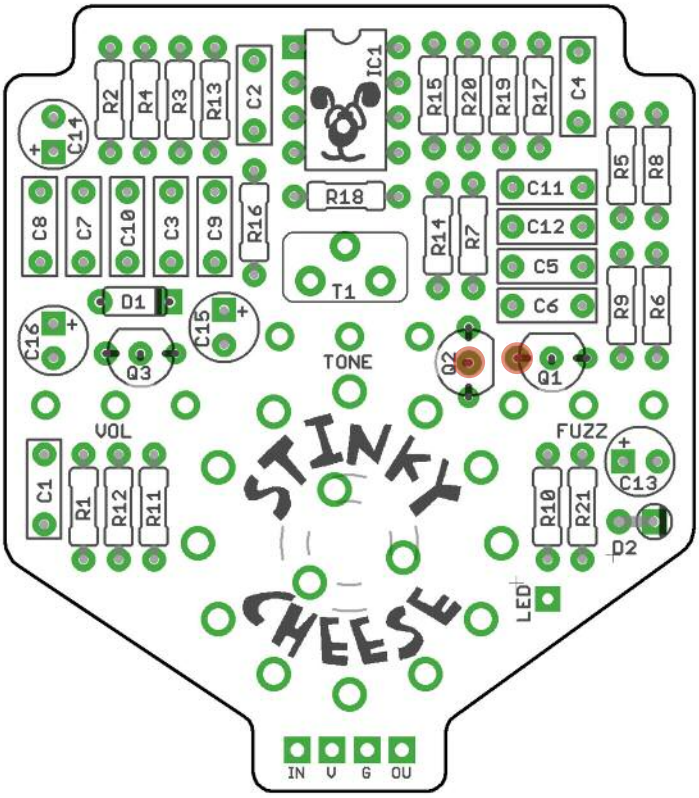

PCB Layout ©2015 Pedal Parts Ltd.

Be very careful when soldering the diodes, LED and transistors. They're very sensitive to heat. You should use some kind of heat sink (crocodile clip or reverse action tweezers) on each leg as you solder them. Keep exposure to heat to a minimum (under 2 seconds).

The striped leg (cathode) of the diodes go into the square pads.

The long leg (anode) of the electrolytic capacitors go into the square pads.

Due to the height of the rotary switch you'll need a small horizontal format trimmer for Q1 as shown on the main cover image. This will give you plenty of clearance in the enclosure.

Snap the small metal tag off the pots so they can be mounted flush in the box.

Pot mounts on the back side of the board. You can use vertical-mount pots or just wire up 'normal' ones. It's a good idea to place the pots in their holes in the enclosure when you're soldering them in place on the PCB. That way you know they're going to line up ok. Best way to do it is to solder a single pin of each pot in place, then do a visual check to see that they're all sitting at the same height. If not, melt the joints and readjust any that are off.

Similarly, for the rotary switch it's best to solder a single lug then check it for position before doing the rest.

Align the switch so the round indicator tab on the top side is in the same position as this marking on the PCB >>>

You'll have to snap off the indicator tab to mount the switch flush in the box.

If your pots don't have protective plastic covers you should place a strip of thick card between them and the board when soldering to keep them a good distance from the pcb to avoid shorting other components.

You should solder all other board-mounted components before you solder the pots. Once they're in place you'll have no access to much of the underside of the board.

The bottom of your board should look like this >>>>>

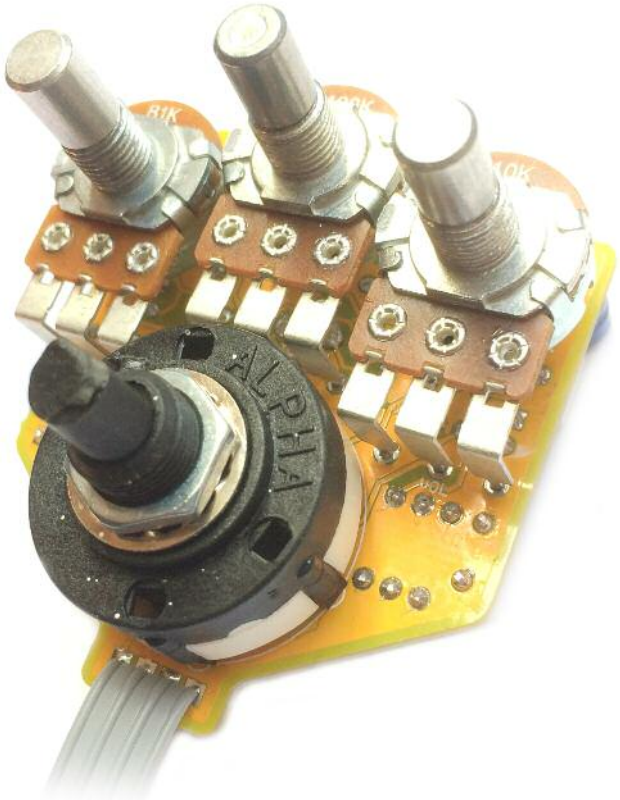

Hack alert!

A small hack is required to get this working. Bend the middle leg of Q2 out to the front before placing the two outer pins in their pads. Solder them in. Now put Q1 in place and position the middle leg of Q2 so its touching the left hand leg of Q1. Solder in Q1, then solder the two touching legs together. It ain't pretty but it works.

Tone Selection

The rotary switch selects between four different tone modes. These are:

- Tone Bypass
- Mid Scoop
- Mid Boost
- Gate

Adjust the T1 trimmer when in the Gate postition to set your preferred amount of silliness.

Test the board!

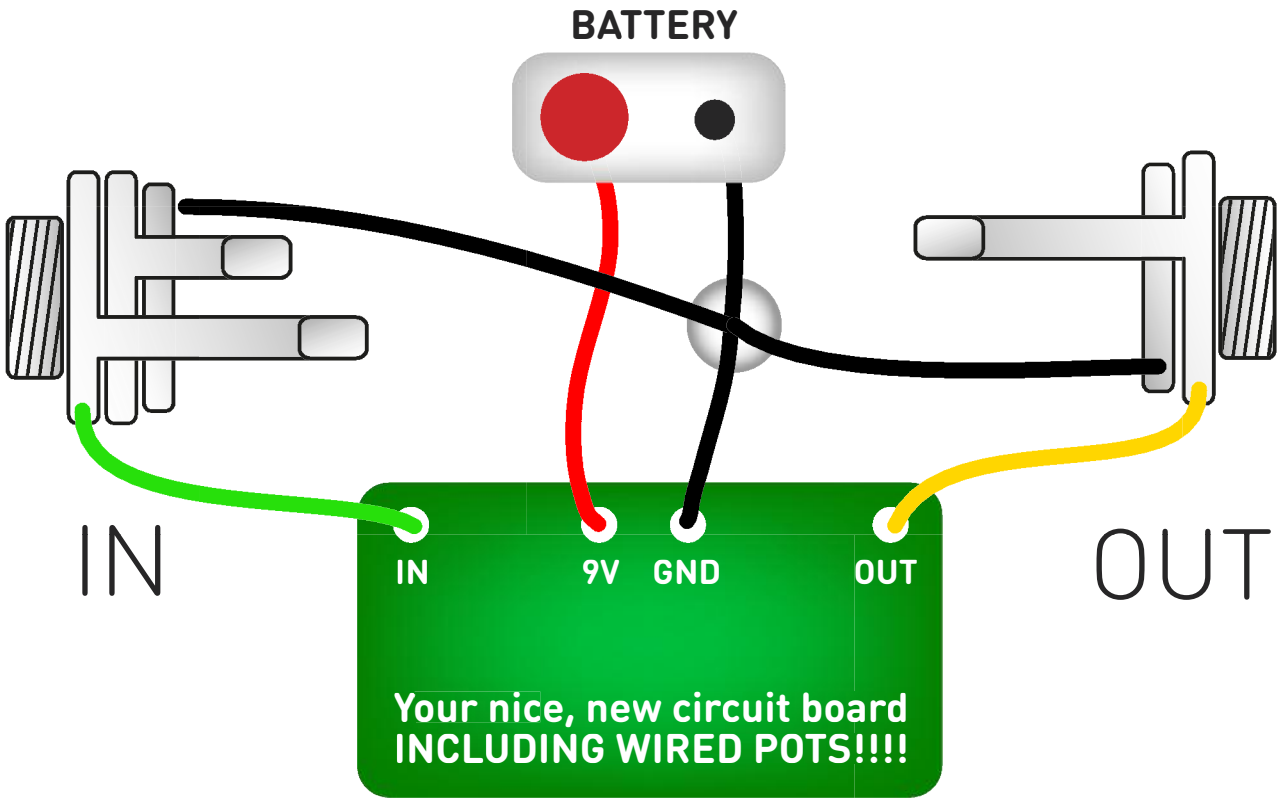

UNDER NO CIRCUMSTANCES will troubleshooting help be offered if you have skipped this stage. No exceptions.

Once you've finished the circuit it makes sense to test is before starting on the switch and LED wiring. It'll cut down troubleshooting time in the long run. If the circuit works at this stage, but it doesn't once you wire up the switch - guess what? You've probably made a mistake with the switch.

Solder some nice, long lengths of wire to the board connections for 9V, GND, IN and OUT. Connect IN and OUT to the jacks as shown. Connect all the GNDs together (twist them up and add a small amount of solder to tack it). Connect the battery + lead to the 9V wire, same method. Plug in. Go!

If it works, crack on and do your switch wiring. If not... aw man.
At least you know the problem is with the circuit. Find out why, get it working, THEN worry about the switch etc.

Wire it up - DC only version

(if using a daughterboard please refer to the relevant document)

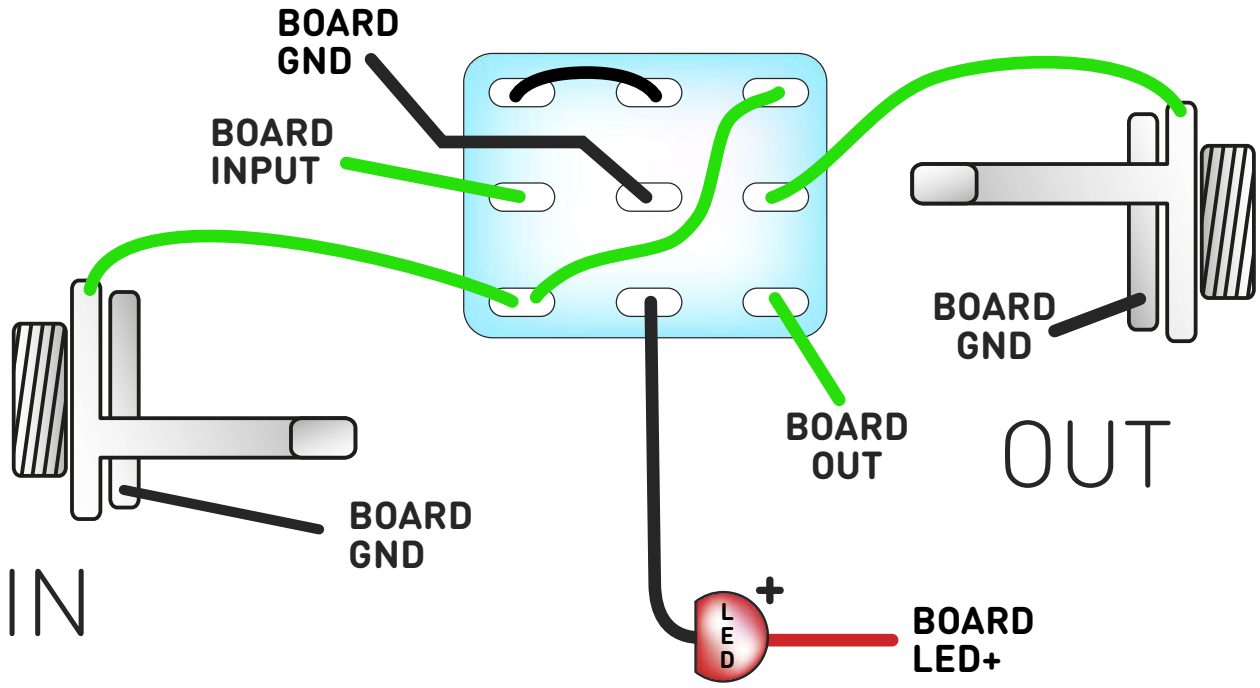

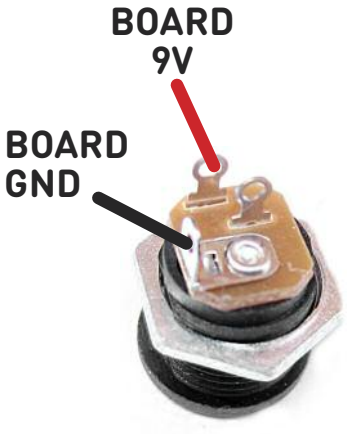

This circuit is standard, Negative GND. Your power supply should be Tip Negative / Sleeve Positive. That's the same as your standard pedals (Boss etc), and you can safely daisy-chain your supply to this pedal.

The BOARD GND connections don't all have to connect to one point. They can be daisy-chained around the circuit, using larger connection points (such as jack socket lugs) for multiple connections. As long as they all connect together in some way.

Wire it up - with battery

(if using a daughterboard please refer to the relevant document)

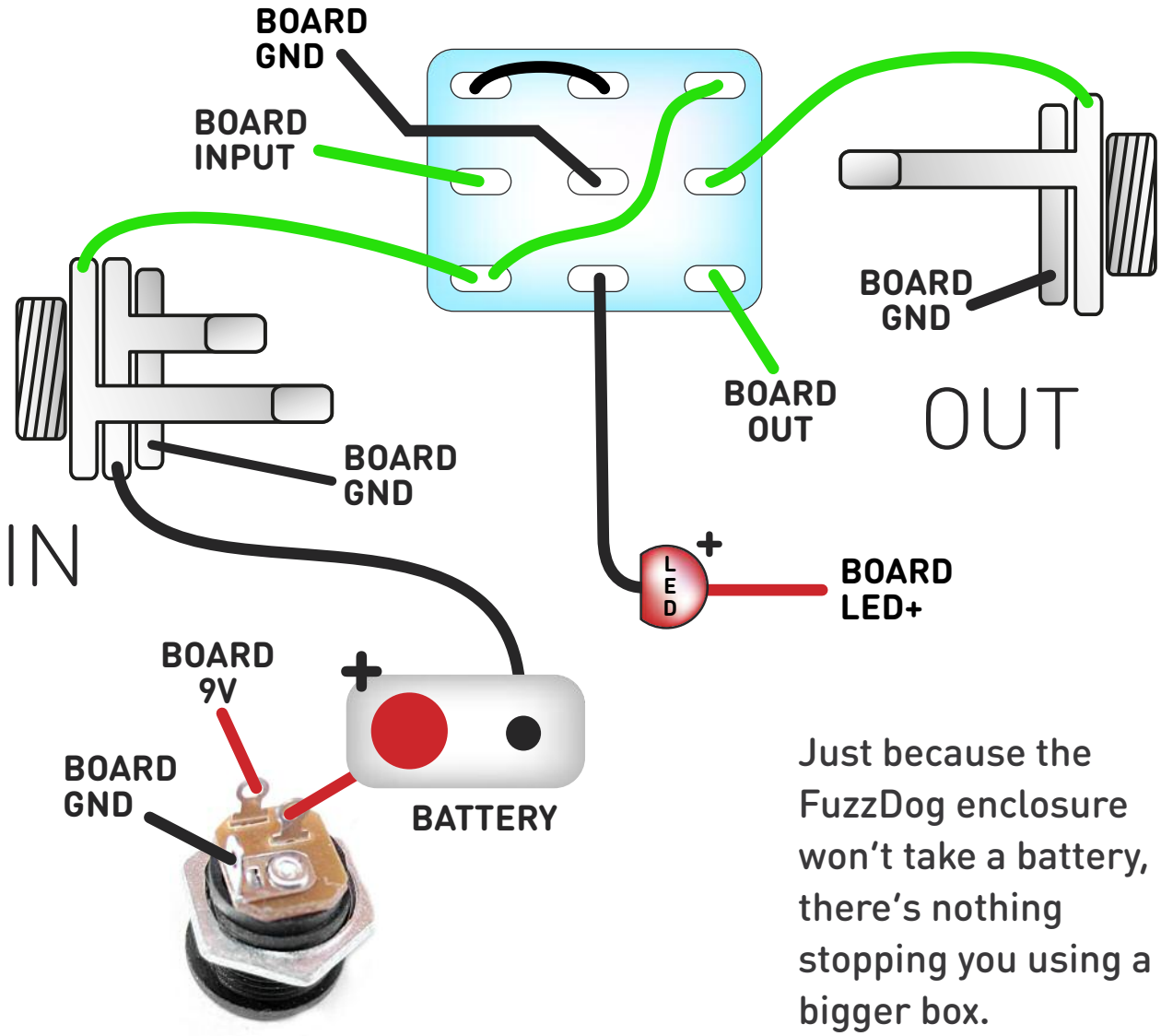

Just because the FuzzDog enclosure won't take a battery, there's nothing stopping you using a bigger box.

This circuit is standard, Negative GND. Your power supply should be Tip Negative / Sleeve Positive. That's the same as your standard pedals (Boss etc), and you can safely daisy-chain your supply to this pedal.

The BOARD GND connections don't all have to connect to one point. They can be daisy-chained around the circuit, using larger connection points (such as jack socket lugs) for multiple connections. As long as they all connect together in some way.

PedalParts.co.uk

Drilling template

Stinky Cheese

Hammond 1590B

60 x 111 x 31mm

Recommended drill sizes:

Pots	7mm
Jacks	10mm
Footswitch	12mm
DC Socket	12mm
Rotary Switch	9mm

It's a good idea to drill the holes for the pots 8mm to give yourself some wiggle room unless you're a drill ninja

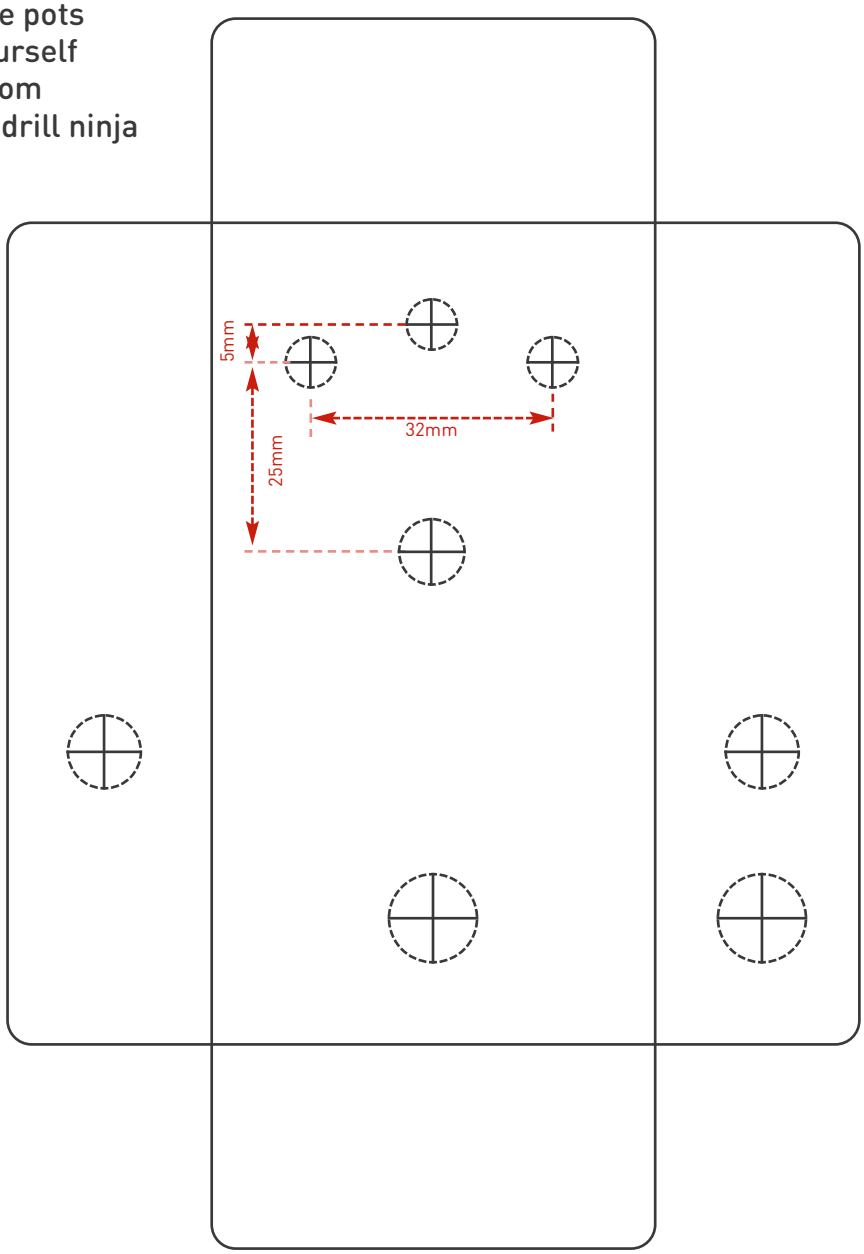

This template is a rough guide only. You should ensure correct marking of your enclosure before drilling. You use this template at your own risk.
Pedal Parts Ltd can accept no responsibility for incorrect drilling of enclosures.

PedalParts.co.uk