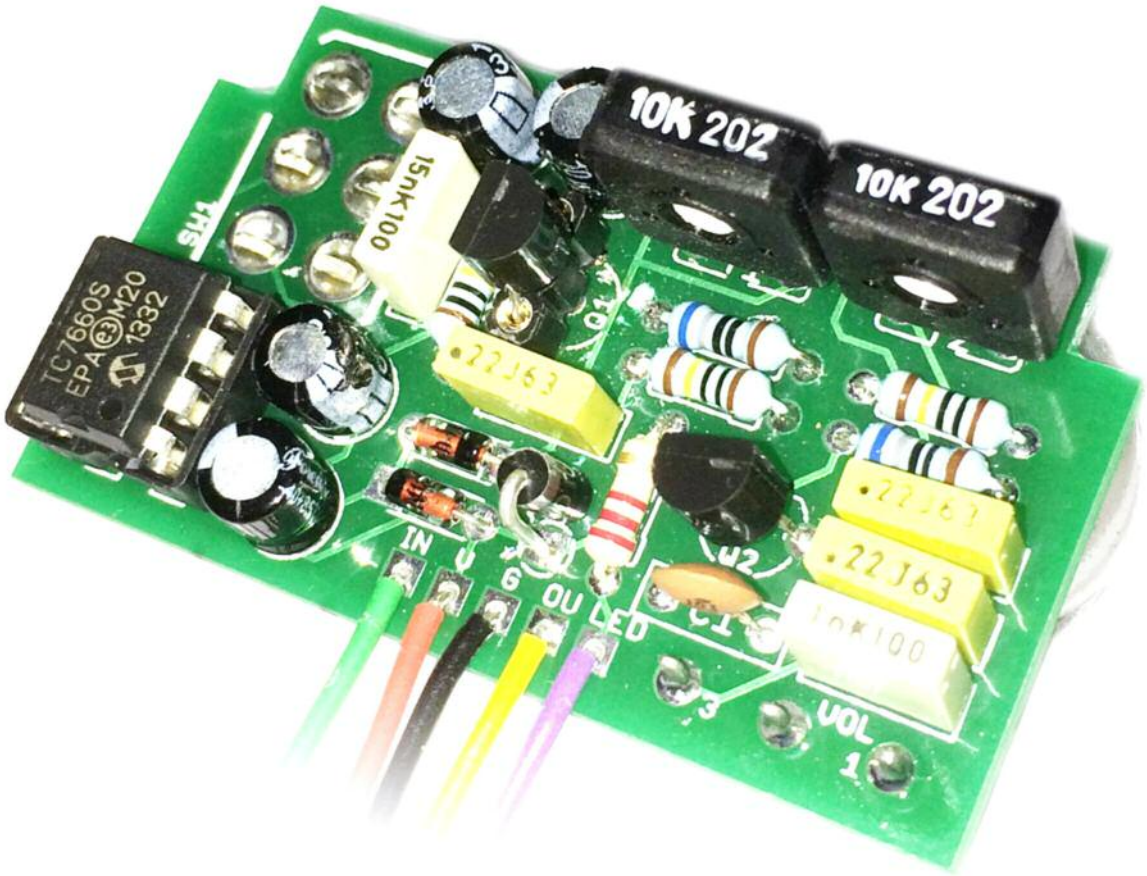

Samurai Boost

Huge boost with massive clean headroom on tap

Schematic and BOM

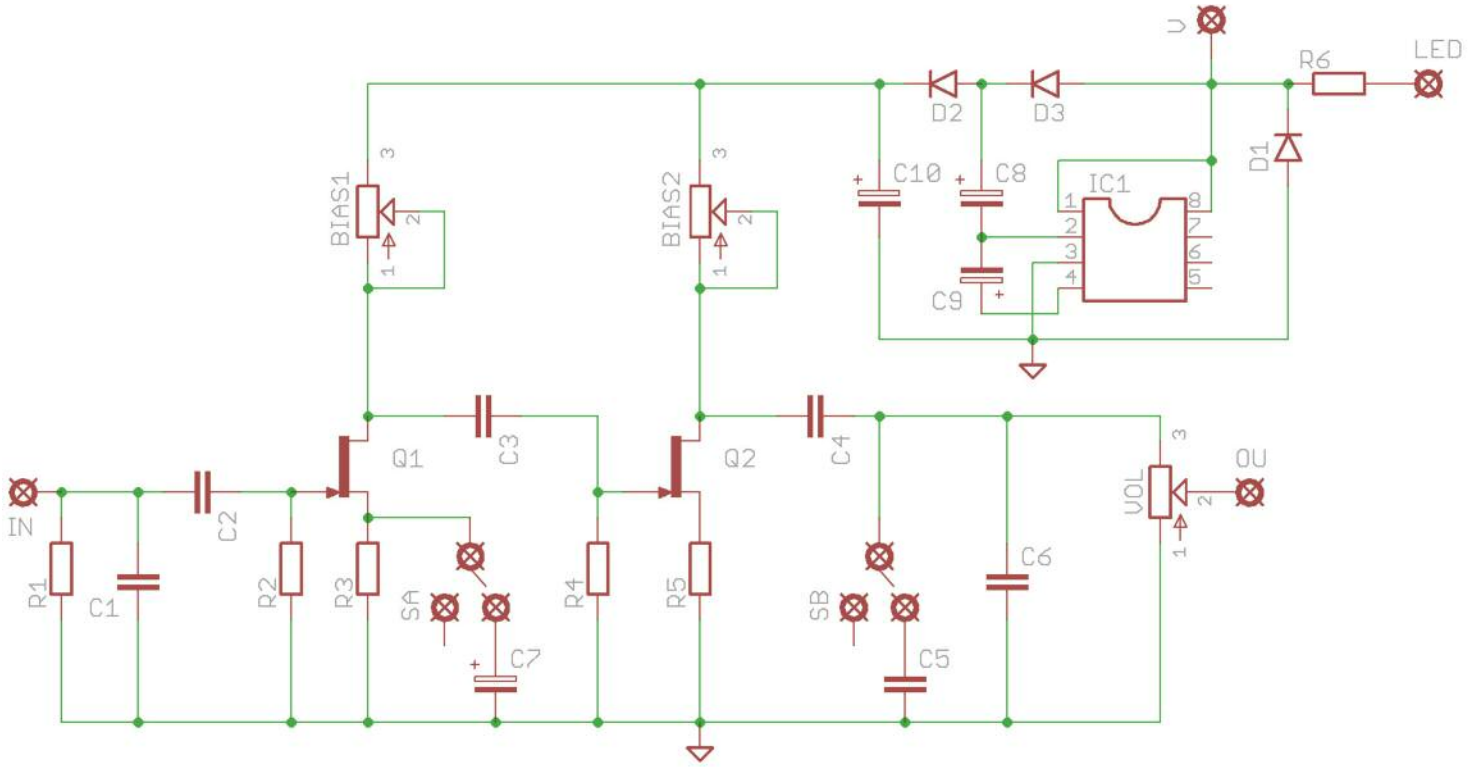

R1	1M	**C1**	100p	**IC**	7660S*
R2	1M	**C2**	220n		
R3	680R	**C3**	220n	**D1**	1N4001
R4	1M	**C4**	220n	**D2-3**	1N4148
R5	680R	**C5**	15n		
R6	2K2 (CLR)	**C6**	1n	**Q1-2**	2N5458**
		C7	10u elec		
BIAS1	10K Trim	**C8**	10u elec	**VOL**	250KB
BIAS2	10K Trim	**C9**	10u elec		
		C10	10u elec	**SW**	DPDT ON-ON

*It's important to get a 7660 charge pump with an 'S' suffix to ensure it operates outside the audible frequency range, otherwise you will hear a whining noise from the output. A MAX1044 will also work.

**Other FETs may work, but none have been tested at FuzzDog HQ.

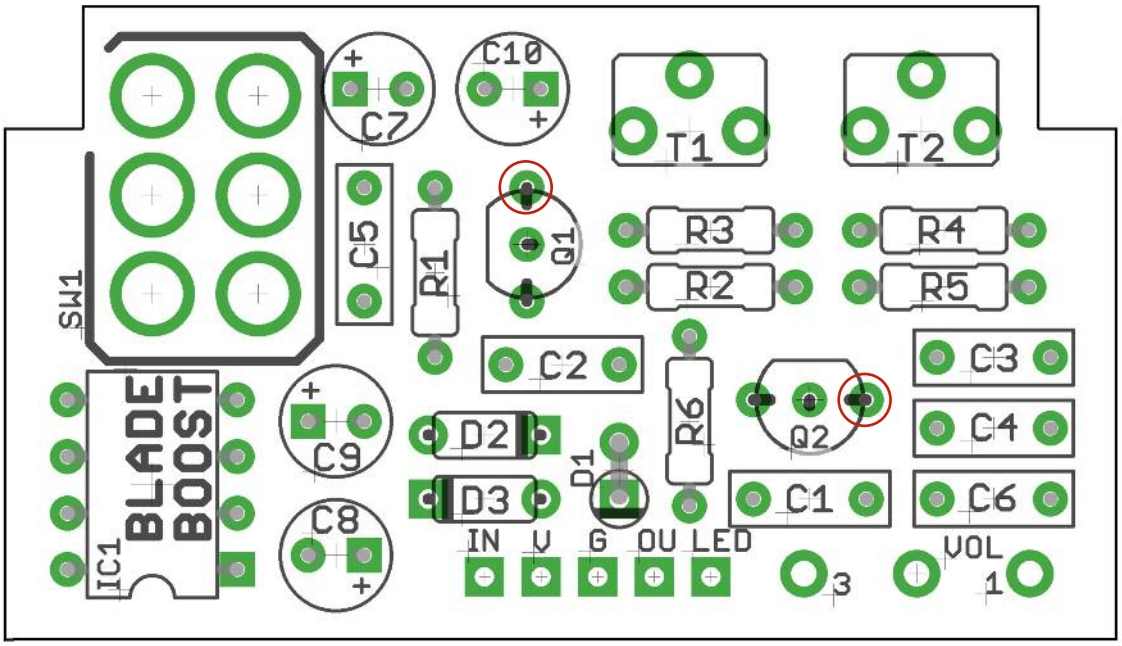

The power and signal pads on the PCB conform to the FuzzDog Direct Connection format, so can be paired with the appropriate daughterboard for quick and easy offboard wiring.

Snap the small metal tag off the pot so it can be mounted flush in the box.

Pot mounts on the back side of the board, along with the toggle switch. You can use a vertical-mount pot or just wire up a 'normal' one.

The striped leg (cathode) of the diodes go into the square pads.

The long leg (anode) of the electrolytic capacitors go into the square pads.

BIASING

Once built, wire it up as per the test wiring on the next page, then adjust the trimmers to bias the FETs. BIAS1 adjusts Q1, 2 adjusts Q2.

Set your multimeter (you do have one, right?) to DC Voltage, small range around 20V. Black lead attaches to any GND point, red lead on the Drain of your FET (circled in red above). You're looking to get a reading of around 9V on each.

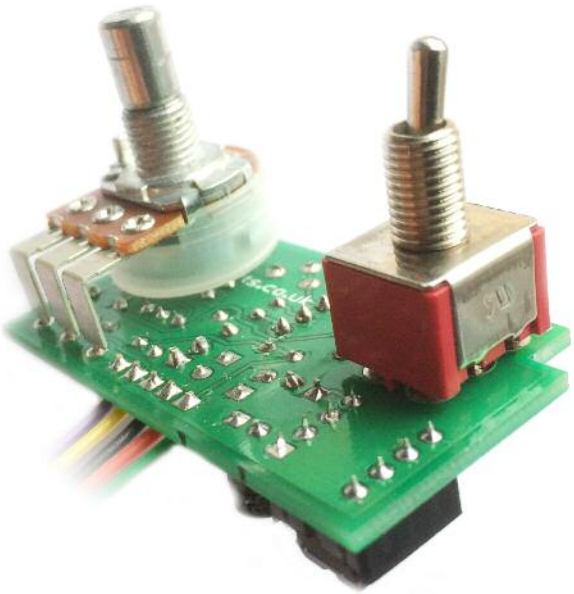

Test the board!

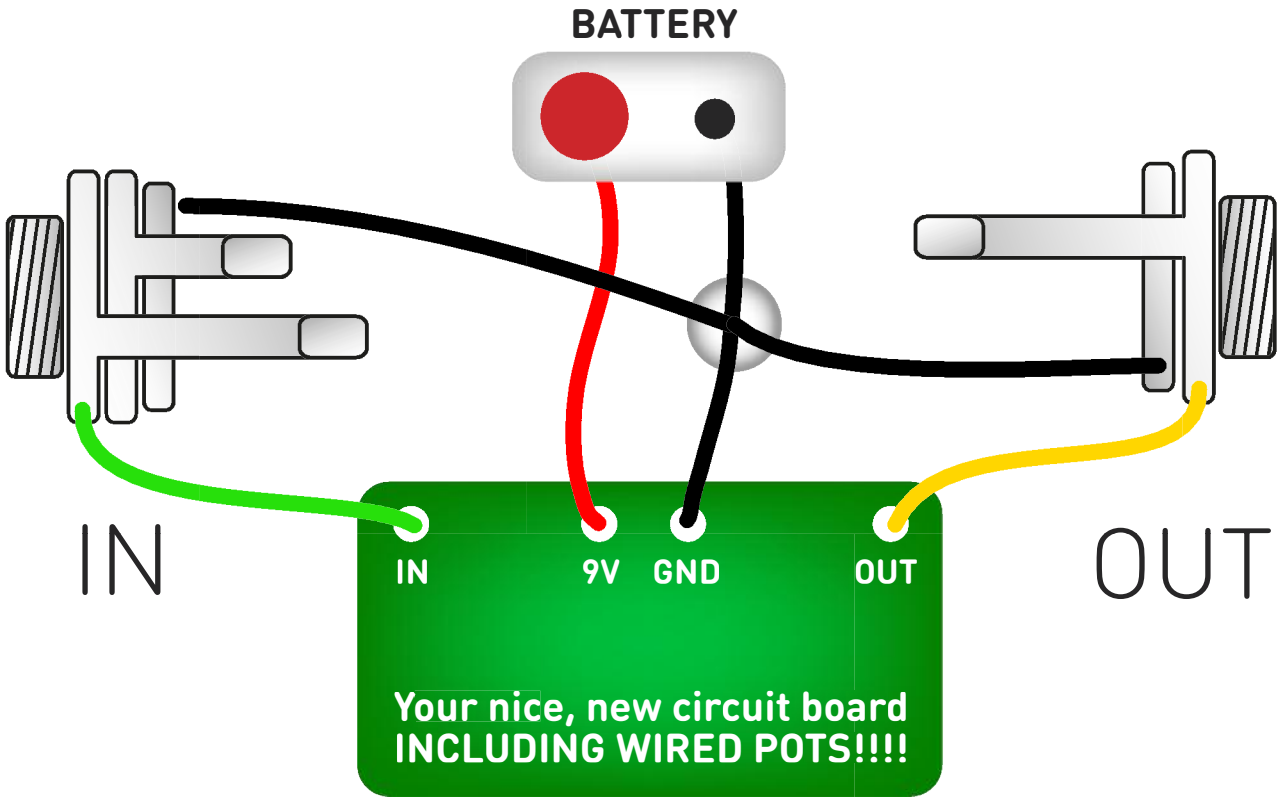

UNDER NO CIRCUMSTANCES will troubleshooting help be offered if you have skipped this stage. No exceptions.

Once you've finished the circuit it makes sense to test is before starting on the switch and LED wiring. It'll cut down troubleshooting time in the long run. If the circuit works at this stage, but it doesn't once you wire up the switch - guess what? You've probably made a mistake with the switch.

Solder some nice, long lengths of wire to the board connections for 9V, GND, IN and OUT. Connect IN and OUT to the jacks as shown. Connect all the GNDs together (twist them up and add a small amount of solder to tack it). Connect the battery + lead to the 9V wire, same method. Plug in. Go!

If it works, crack on and do your switch wiring. If not... aw man. At least you know the problem is with the circuit. Find out why, get it working, THEN worry about the switch etc.

Wire it up

(if using a daughterboard please refer to the relevant document)

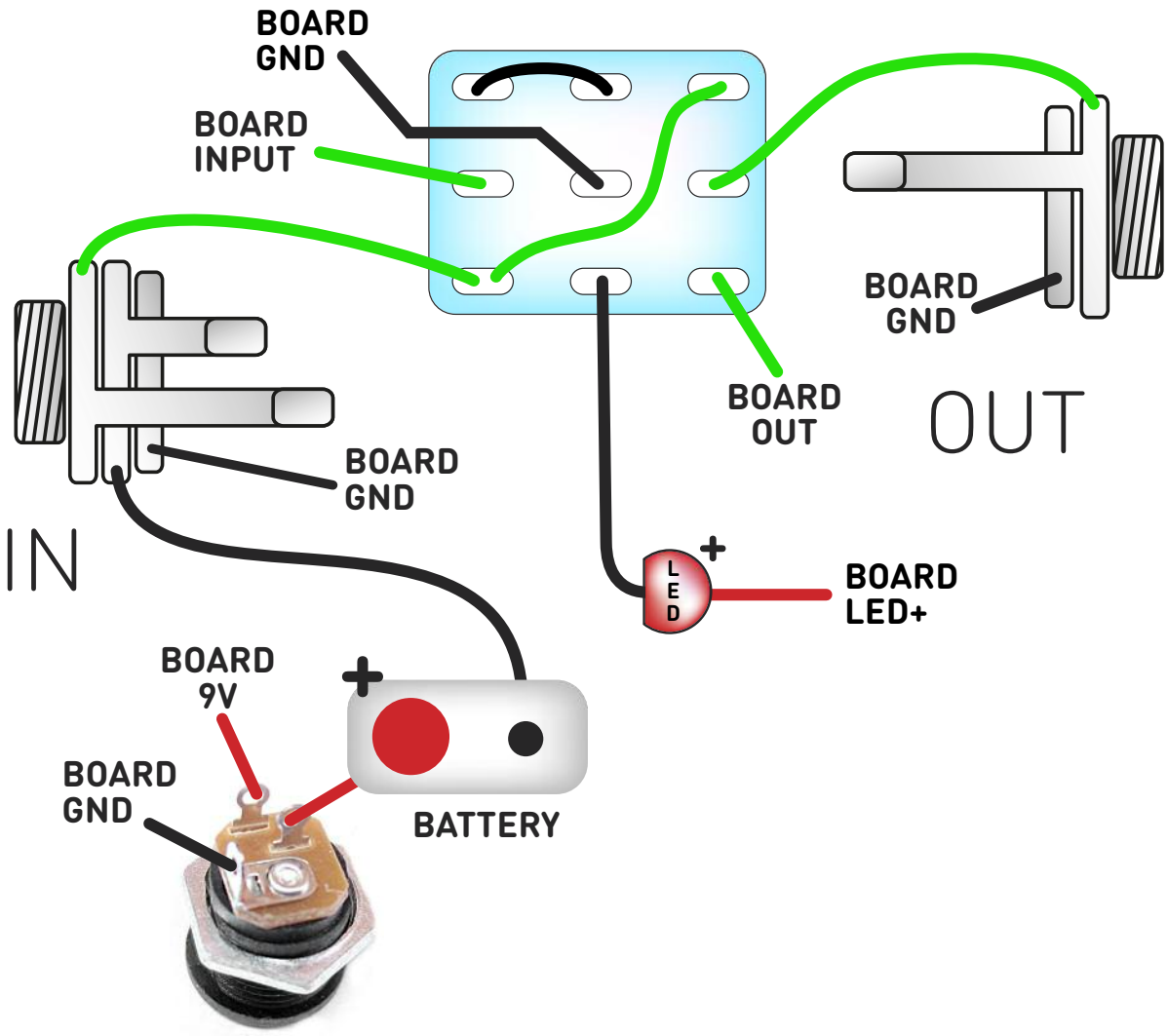

Wiring shown above will disconnect the battery when you remove the jack plug from the input, and also when a DC plug is inserted.

The Board GND connections don't all have to directly attach to the board. You can run a couple of wires from the DC connector, one to the board, another to the IN jack, then daisy chain that over to the OUT jack.

It doesn't matter how they all connect, as long as they do.

This circuit is standard, Negative GND. Your power supply should be Tip Negative / Sleeve Positive. That's the same as your standard pedals (Boss etc), and you can safely daisy-chain your supply to this pedal.