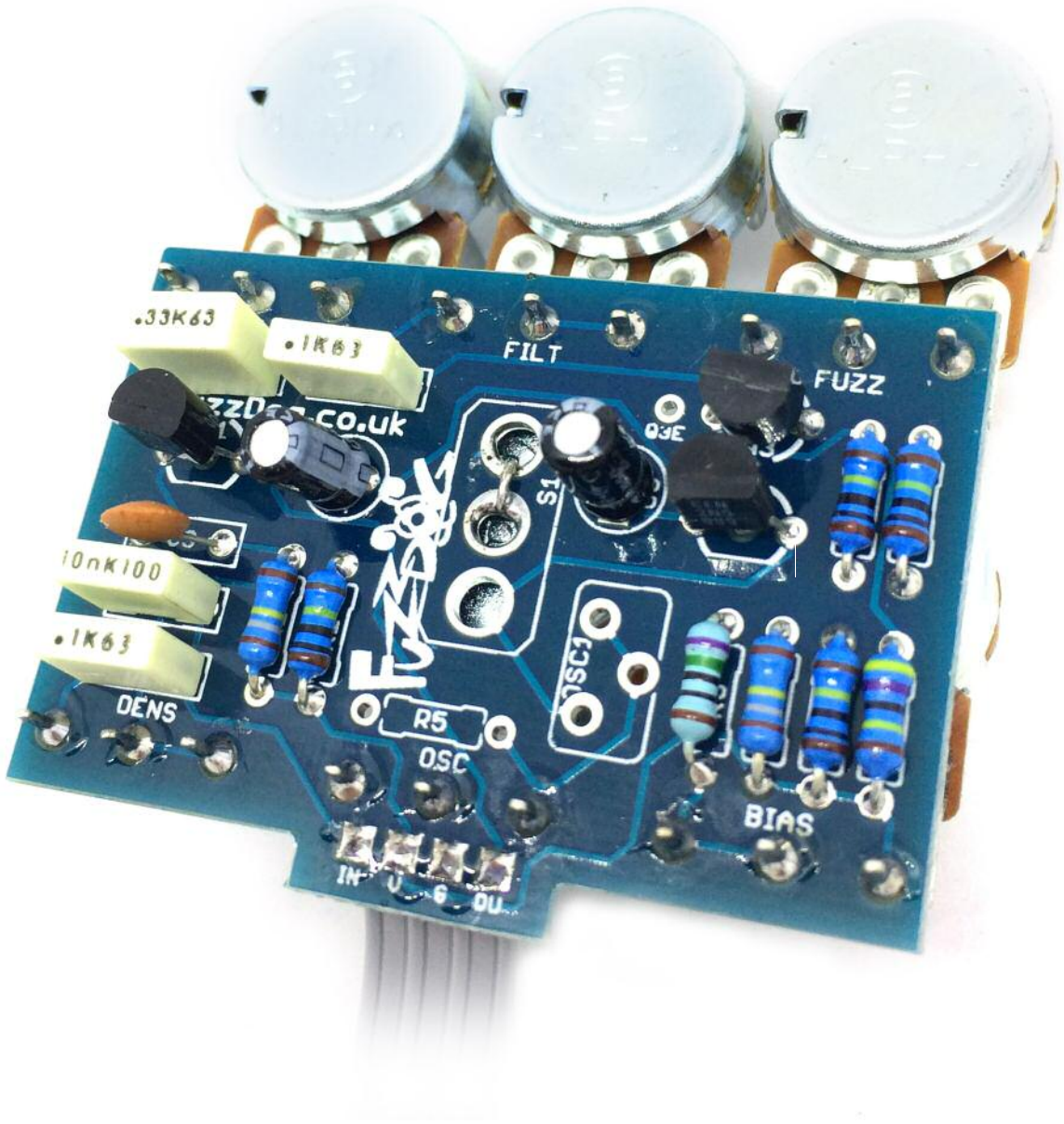

Bionic GuzzFun

Sonic Mayhem

Schematic + BOM

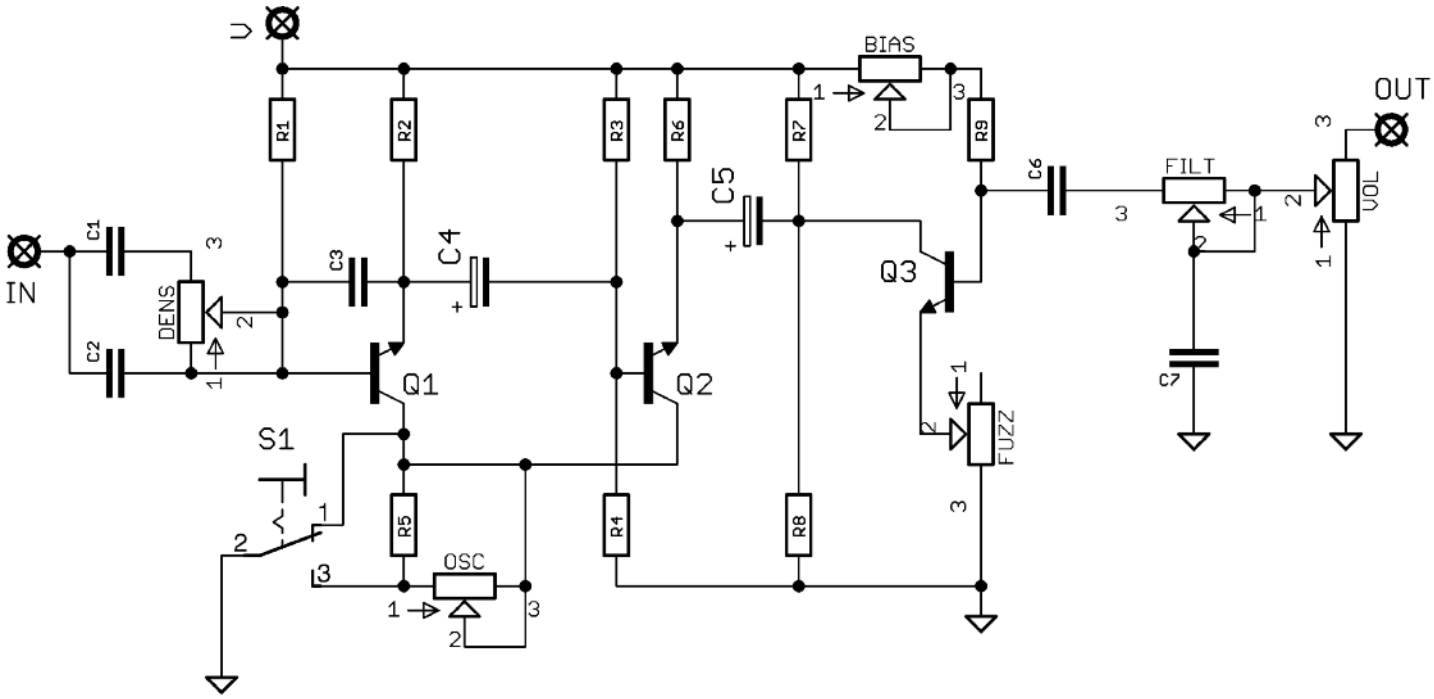

R1	910K	C1	100n	Q1,2*	2N5089
R2	180K	C2	10n	Q3*	2N5306
R3	910K	C3	470p		
R4	910K	C4	4.7u	DENS	100KB
R5	10K**	C5	4.7u	FUZZ	10KB
R6	180K	C6	100n	FILT	10KB
R7	4M7	C7	330n	BIAS	50KB
R8	910K			VOL	100KA
R9	750R	S1**	SPDT ON-ON	OSC**	10KB

*The stock transistors give highly variable, very gated results, which may not be to everyone's taste. That's all part of the charm of this box. However, if you want to make it a bit more 'normal' you can try subbing some other stuff in there. 2N5088 work well in Q1-2, and other medium gain NPN cans may offer good results. A lower gain darlington for Q3 will tame things a bit. MPSA13 worked well in reducing the gating, but the legs will need twisting. See later in the doc for details.

The optional alternatives supplied with the kit are MPSA06, which have the same pinout as 2N5089, and BC517 which is different to the 2N5306 - see next page.

**S1 and the OSC pot are optional and are mutually exclusive. Use one or the other, or none if you don't want the madness. OSC works backwards, more like a Stability control. Fully CW is normal. The more you wind it back, the more oscillation you'll get.
If you're using the OSC pot, leave out R5.

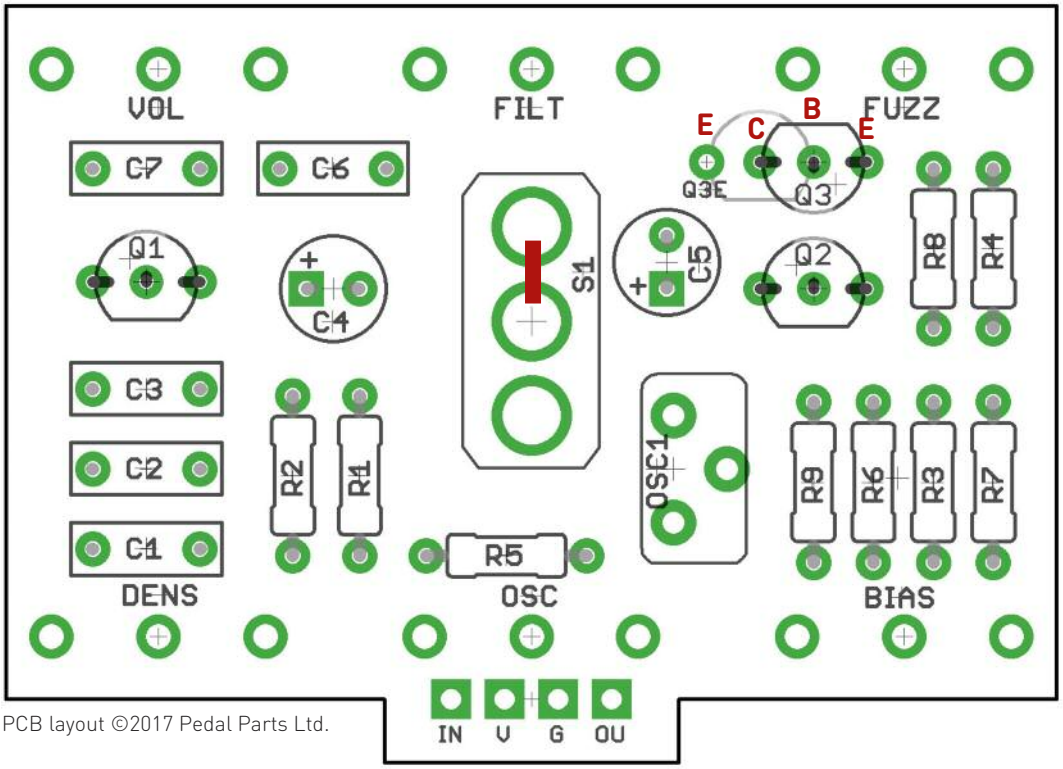

PCB layout ©2017 Pedal Parts Ltd.

Ignore the OSC1 trimmer spot. It was a nice thought but not useful.

If you're using the pot for oscillation control instead of the toggle switch you need to place a jumper on the switch pads as shown in red.

The power and signal pads on the PCB conform to the FuzzDog Direct Connection format, so can be paired with the appropriate daughterboard for quick and easy offboard wiring. Check the separate daughterboard document for details.

Be very careful when soldering the transistors. They're very sensitive to heat. You should use some kind of heat sink (crocodile clip or reverse action tweezers) on each leg as you solder them. Keep exposure to heat to a minimum (under 2 seconds). Same goes for the ICs if you aren't using sockets.

Snap the small metal tag off the pots so they can be mounted flush in the box.

Positive (anode) legs of the electrolytic caps go to the square pads.

You should solder all other board-mounted components before you solder the pots. Once they're in place you'll have no access to much of the board. Make sure your pots all line up nicely. The best way to do that is to solder a single pin of each pot in place then melt and adjust if necessary before soldering in the other two pins. If your pots don't have protective plastic jackets ensure you leave a decent gap between the pot body and the PCB otherwise you risk shorting out the circuit.

Q3 PLACEMENT

The main pads for Q3 have a standard CBE layout. We've added an extra Emitter pad, Q3E, so you don't have to do any fancy leg twisting to accommodate non-standard pinouts. BC517 goes into the normal Q3 pads but flipped. You'll have to check your 2N5306 pinout, as they come in both CBE and ECB. The latter should be placed as per the faint outline shown above.

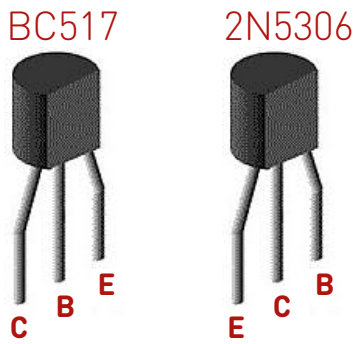

Test the board!

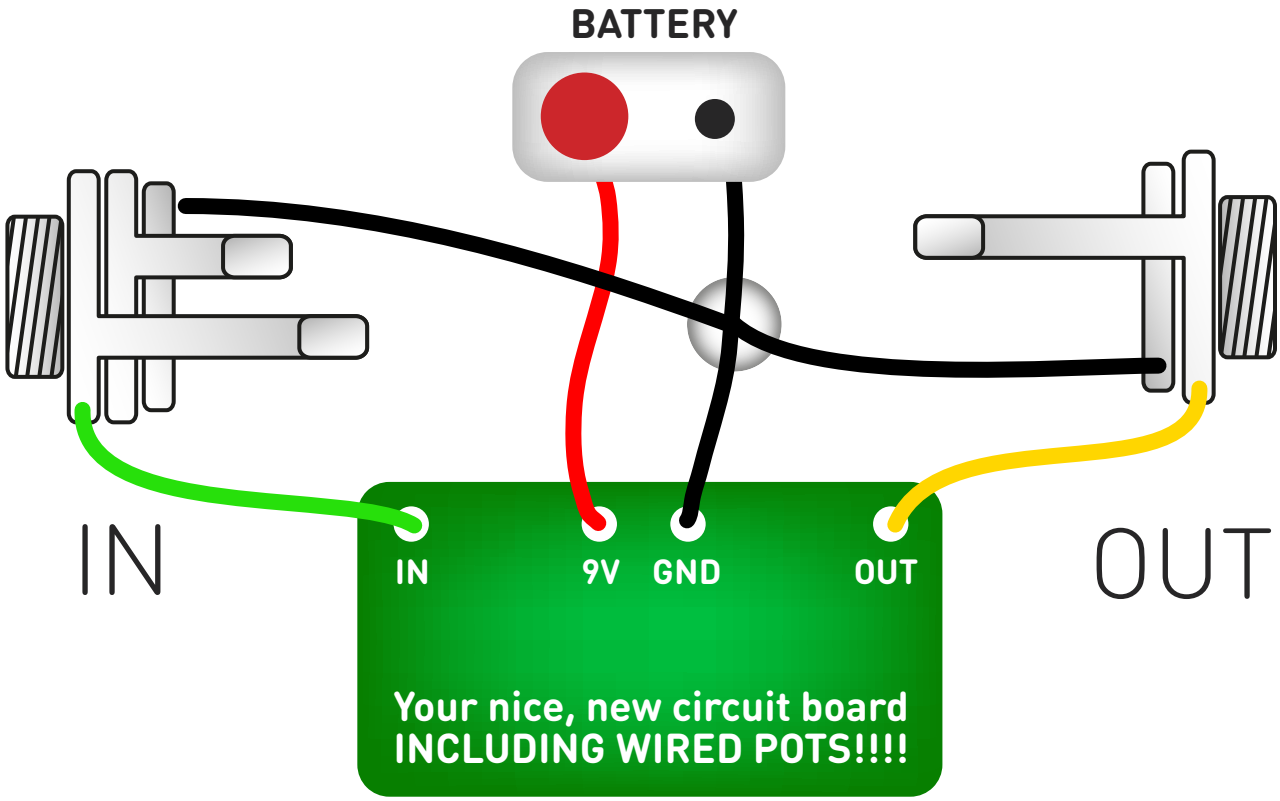

UNDER NO CIRCUMSTANCES will troubleshooting help be offered if you have skipped this stage. No exceptions.

Once you've finished the circuit it makes sense to test is before starting on the switch and LED wiring. It'll cut down troubleshooting time in the long run. If the circuit works at this stage, but it doesn't once you wire up the switch - guess what? You've probably made a mistake with the switch.

Solder some nice, long lengths of wire to the board connections for 9V, GND, IN and OUT. Connect IN and OUT to the jacks as shown. Connect all the GNDs together (twist them up and add a small amount of solder to tack it). Connect the battery + lead to the 9V wire, same method. Plug in. Go!

If it works, crack on and do your switch wiring. If not... aw man. At least you know the problem is with the circuit. Find out why, get it working, THEN worry about the switch etc.

Wire it up (if using a daughterboard please refer to the relevant document)

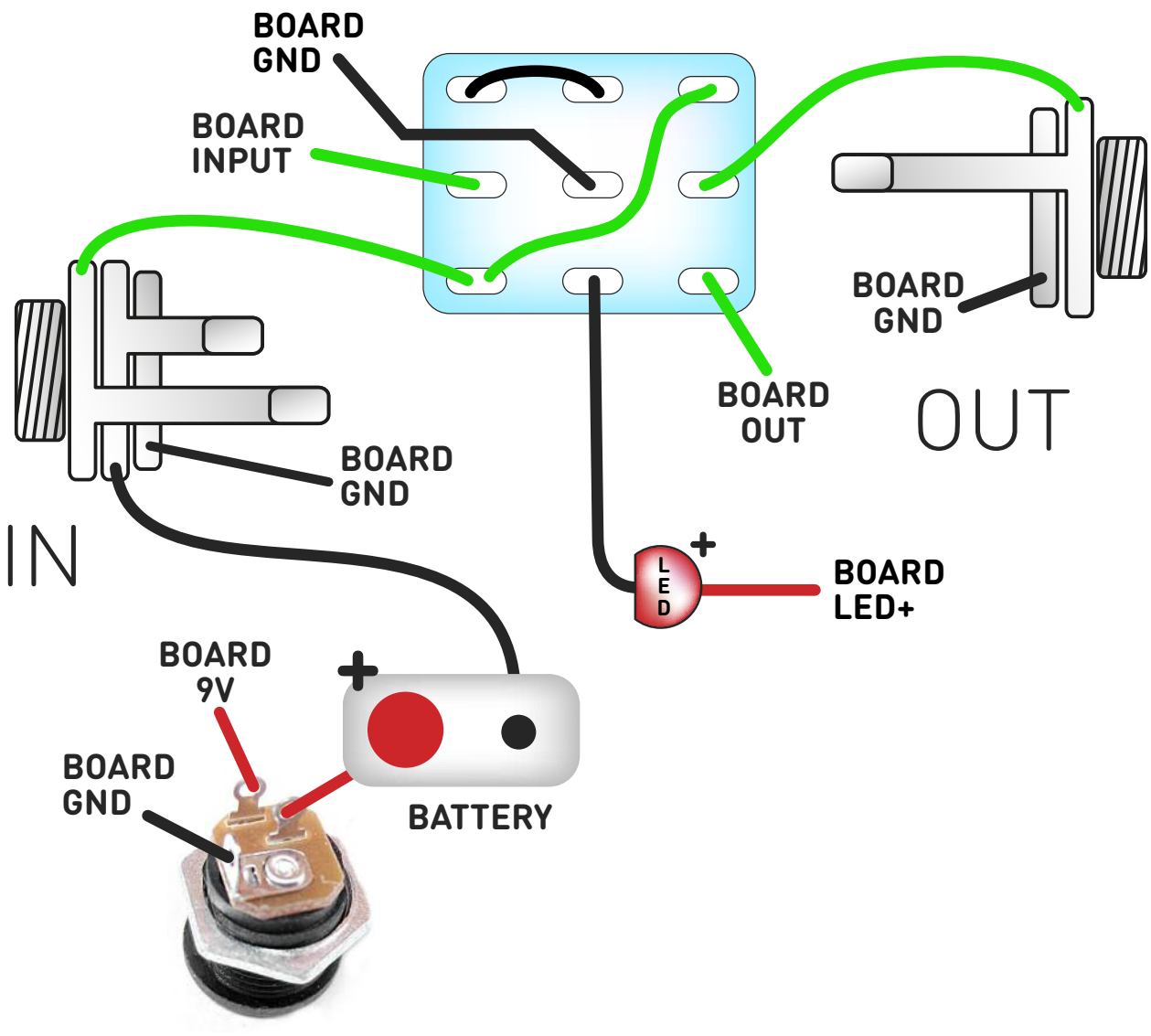

Wiring shown above will disconnect the battery when you remove the jack plug from the input, and also when a DC plug is inserted.

The Board GND connections don't all have to directly attach to the board. You can run a couple of wires from the DC connector, one to the board, another to the IN jack, then daisy chain that over to the OUT jack.

It doesn't matter how they all connect, as long as they do.

This circuit is standard, Negative GND. Your power supply should be Tip Negative / Sleeve Positive. That's the same as your standard pedals (Boss etc), and you can safely daisy-chain your supply to this pedal.

Drilling template

Hammond 1590B

60 x 111 x 31mm

It's a good idea to drill the pot and toggle switch holes 1mm bigger if you're board-mounting them.
Wiggle room = good!

Recommended drill sizes:

Pots	7mm
Jacks	10mm
Footswitch	12mm
DC Socket	12mm
Toggle Switch	6mm

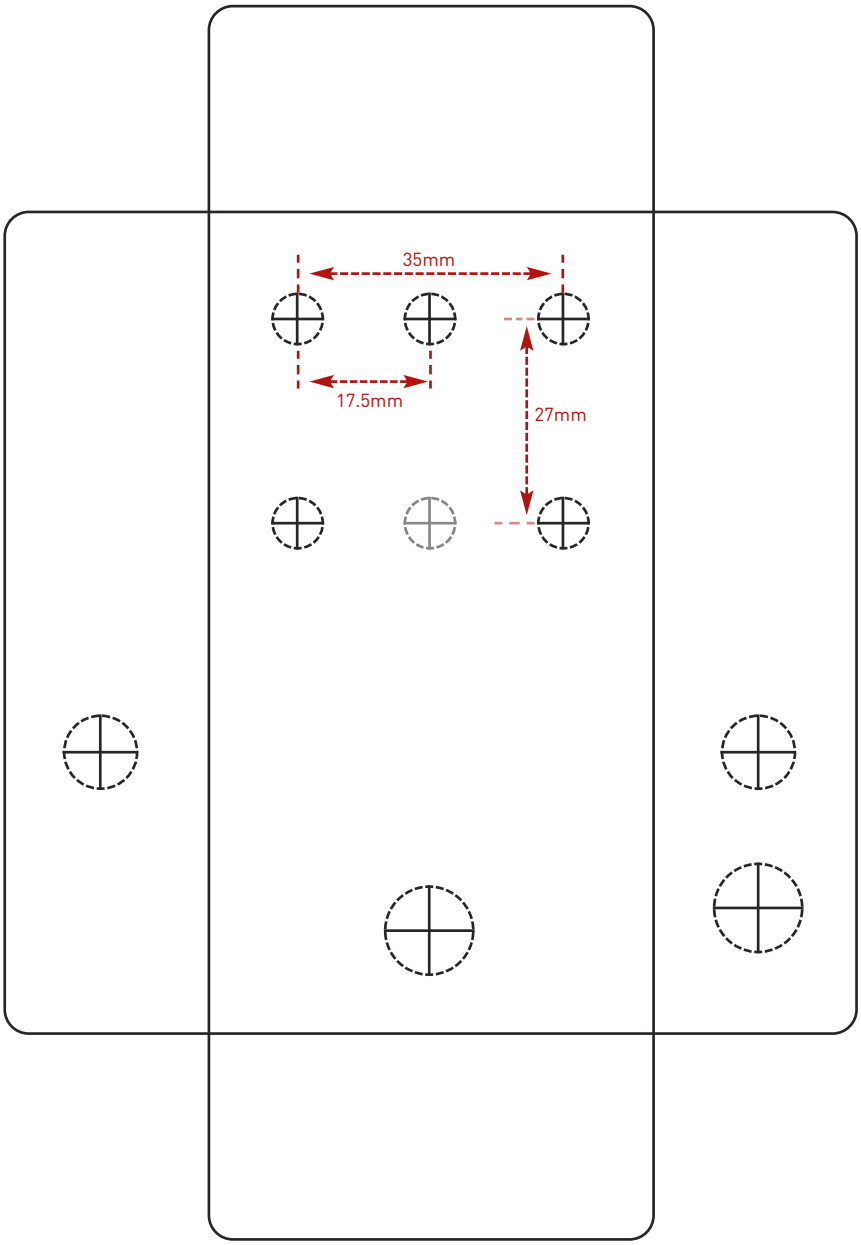

This template is a rough guide only. You should ensure correct marking of your enclosure before drilling. You use this template at your own risk.
Pedal Parts Ltd can accept no responsibility for incorrect drilling of enclosures.

FuzzDog.co.uk