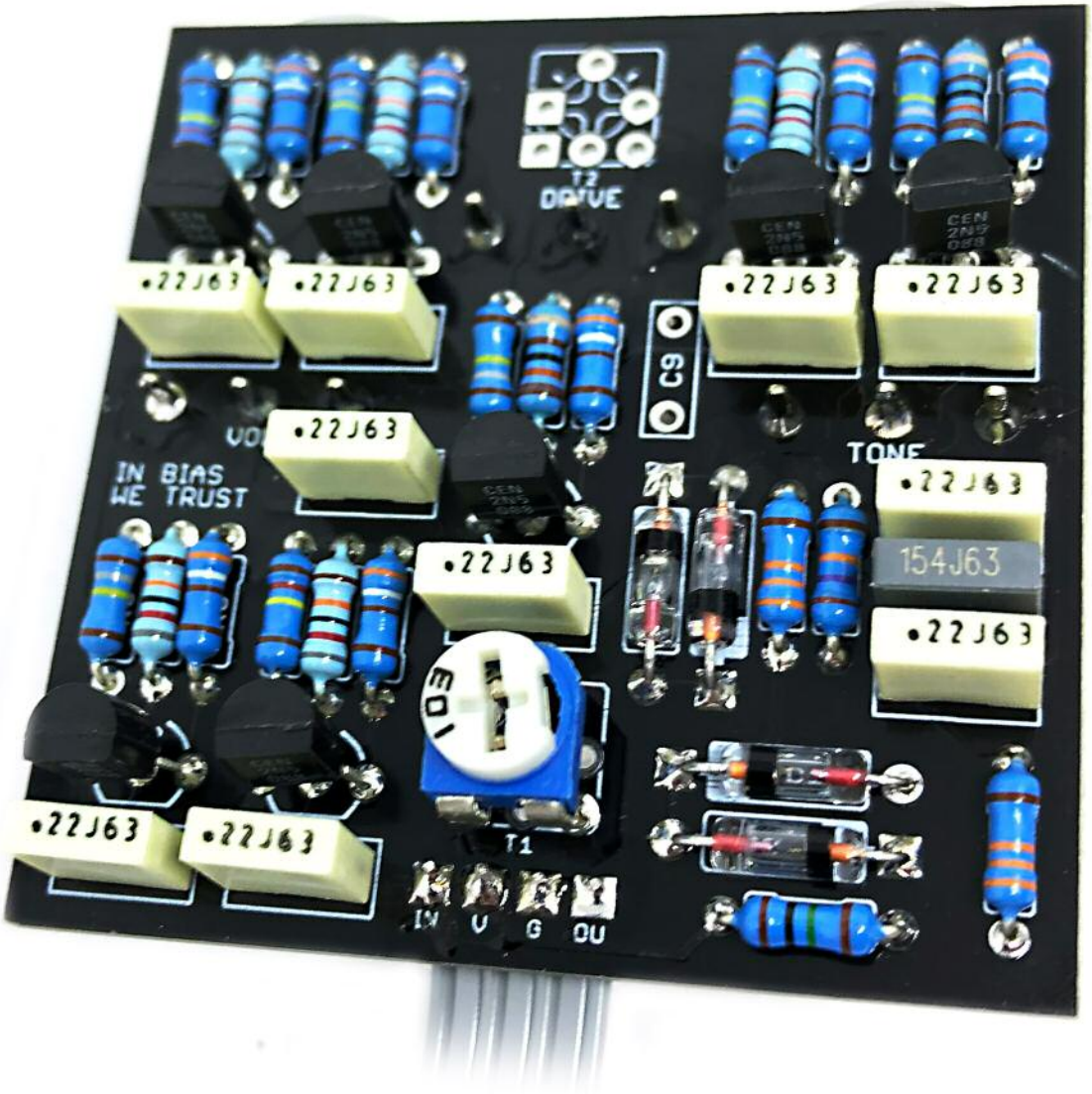

Raw Fuzz (THE EARLY YEARS)

Infamously fiddly 7-transistor fuzz monster

Important notes

If you're using any of our footswitch daughterboards, DOWNLOAD THE DAUGHTERBOARD DOCUMENT

- Download and read the appropriate build document for the daughterboard as well as this one BEFORE you start.
- DO NOT solder the supplied Current Limiting Resistor (CLR) to the main circuit board even if there is a place for it. This should be soldered to the footswitch daughterboard.

POWER SUPPLY

Unless otherwise stated in this document this circuit is designed to be powered with 9V DC.

COMPONENT SPECS

Unless otherwise stated in this document:

- Resistors should be 0.25W. You can use those with higher ratings but check the physical size of them.
- Electrolytics caps should be at least 25V for 9V circuits, 35V for 18V circuits. Again, check physical size if using higher ratings.

LAYOUT CONVENTIONS

Unless otherwise stated in this document, the following are used:

- **Electrolytic capacitors:**
  Long leg (anode) to square pad.
- **Diodes/LEDs:**
  Striped leg (cathode) to square pad. Short leg to square pad for LEDs.
- **ICs:**
  Square pad indicates pin 1.

Schematic + BOM Stable Version

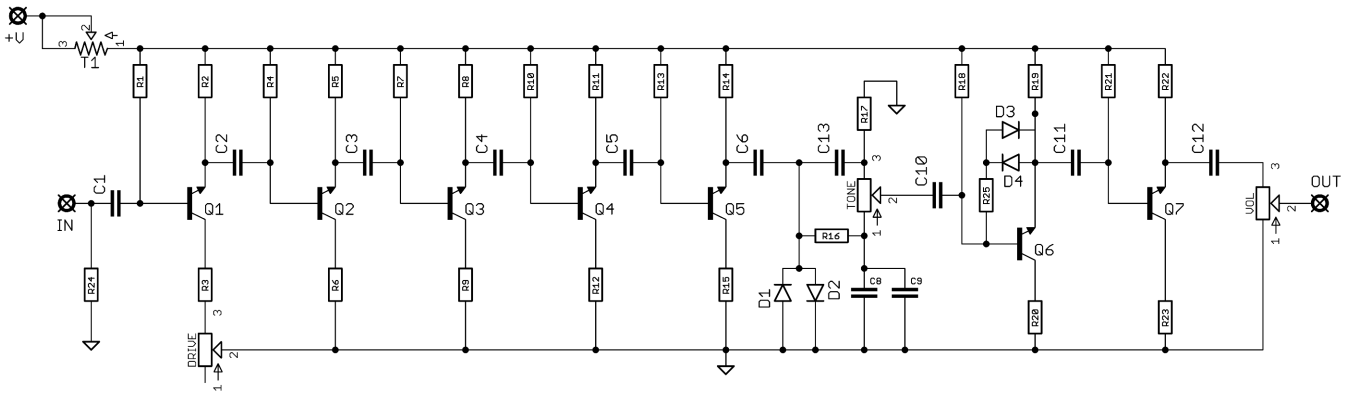

R1	820K
R2	120K
R3	390R
R4	820K
R5	180K
R6	390R
R7	820K
R8	120K
R9	390R
R10	820K
R11	180K
R12	390R
R13	820K
R14	180K
R15	390R
R16	33K
R17	33K
R18	910K
R19	180K
R20	390R
R21	910K
R22	180K
R23	390R
R24	1M
R25	27K

C1	220n
C2	220n
C3	220n
C4	220n
C5	220n
C6	220n
C8	22n*
C9	120n*
C10	220n
C11	220n
C12	220n
C13	220n

D1-4	Germanium
Q1-7	2N5088
TONE	100KB
GAIN	100KB**
VOL	1MA
T1	10K***

*You can use a 150n cap in either C8 or C9 and leave the other empty instead of using these values.

**Use a 100K trimmer in place of the Gain pot if you want to build a two-knob version as per the original.

***Optional starve/bias control. To be honest you're unlikely to find a setting for this other than fully closed, giving the full 9V supply, unless you want a squealing monster.

Schematic + BOM Original Version

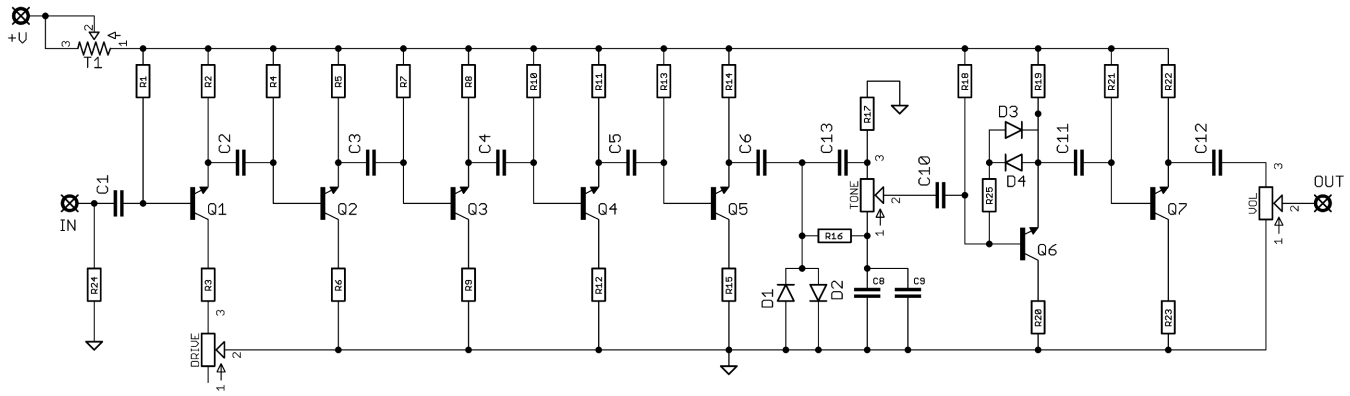

R1	430K
R2	120K
R3	390R
R4	430K
R5	180K
R6	390R
R7	430K
R8	120K
R9	390R
R10	430K
R11	180K
R12	390R
R13	430K
R14	180K
R15	390R
R16	33K
R17	33K
R18	910K
R19	180K
R20	390R
R21	910K
R22	180K
R23	390R
R23	1M
R23	27K

C1	680n
C2	680n
C3	680n
C4	680n
C5	680n
C6	680n
C8	22n*
C9	120n*
C10	680n
C11	680n
C12	680n
C13	680n

D1-4	Germanium
Q1-7	2N5089
TONE	100KB
GAIN	100KB**
VOL	1MB
T1	10K***

See notes on previous page for * / ** / ***

The values on the original pedal have given most builders a real headache. The 430K biasing transistors almost always fail to yield a working circuit. We can only assume the original designers had very narrow criteria for selecting the transistors used if they got it to work. The higher gain 2N5089 transistors are a bit much, and 2N5088 give more useable results.

Log taper works better for the Volume control

OUT
VOL
C12
Q7
R22
R23
R21
C11
Q6
R19
R20
D3
D4
R25
R18
C10
C9
C8
R17
TONE
R16
C13
D2
D1
C6
Q5
R14
R15
R13
C5
Q4
R11
R12
R10
C4
Q3
R8
R9
R7
C3
Q2
R5
R6
R4
C2
Q1
R2
R3
DRIVE
R1
C1
R24
IN
T1
+

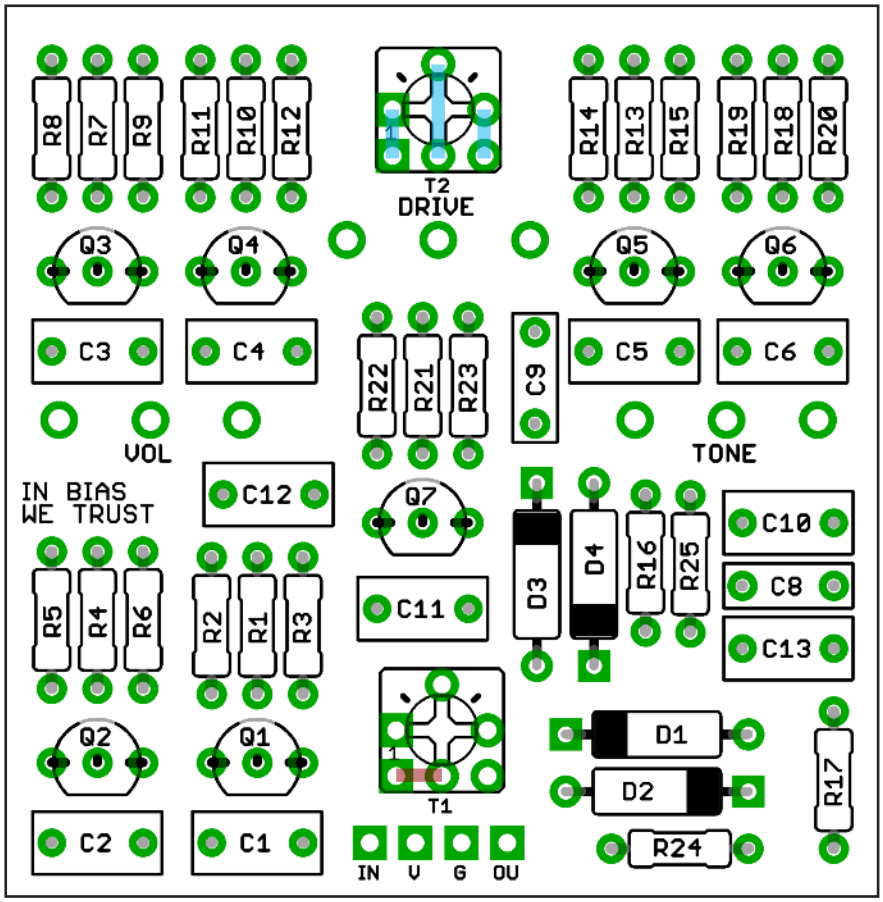

PCB layout ©2020 Pedal Parts Ltd.

The power and signal pads on the PCB conform to the FuzzDog Direct Connection format, so can be paired with the appropriate daughterboard for quick and easy offboard wiring. Check the separate daughterboard document for details.

Be very careful when soldering the transistors and diodes. They're very sensitive to heat. You should use some kind of heat sink (crocodile clip or reverse action tweezers) on each leg as you solder them. Keep exposure to heat to a minimum (under 2 seconds).

Be very careful when bending the legs of the diodes. The glass case is very delicate and is easily broken. Hold each leg in turn with some needle-nosed pliers right up against the body, then bend the leg with your finger, letting the pliers take the strain.

You should solder all other board-mounted components before you solder the pots. Once they're in place you'll have no access to much of the board. Make sure your pots all line up nicely.

The best way to do that is to solder a single pin of each pot in place then melt and adjust if necessary before soldering in the other two pins. If your pots don't have protective plastic jackets ensure you leave a decent gap between the pot body and the PCB otherwise you risk shorting out the circuit.

Snap the small metal tag off the pots so they can be mounted flush in the box.

There are extra pads on trimmers to allow different package formats to be used. Pads are connected via PCB traces as shown above, so just fit your trimmer into whichever holes it fits naturally into. As long as you have one pin each in the left, centre and right sections.
No jumpers are required.

If you aren't adding T1 put a jumper as shown in red above.

Test the board!

Check the relevant daughterboard document for more info before you undertake this stage.

UNDER NO CIRCUMSTANCES will troubleshooting help be offered if you have skipped this stage. No exceptions.

Once you've finished the circuit it makes sense to test is before starting on the switch and LED wiring. It'll cut down troubleshooting time in the long run. If the circuit works at this stage, but it doesn't once you wire up the switch - guess what? You've probably made a mistake with the switch.

Solder some nice, long lengths of wire to the board connections for 9V, GND, IN and OUT. Connect IN and OUT to the jacks as shown. Connect all the GNDs together (twist them up and add a small amount of solder to tack it). Connect the battery + lead to the 9V wire, same method. Plug in. Go!

If you're using a ribbon cable you can tack the wires to the ends of that. It's a lot easier to take them off there than it is do desolder wires from the PCB pads.

If it works, carry on and do your switch wiring. If not... aw man. At least you know the problem is with the circuit. Find out why, get it working, THEN worry about the switch etc.

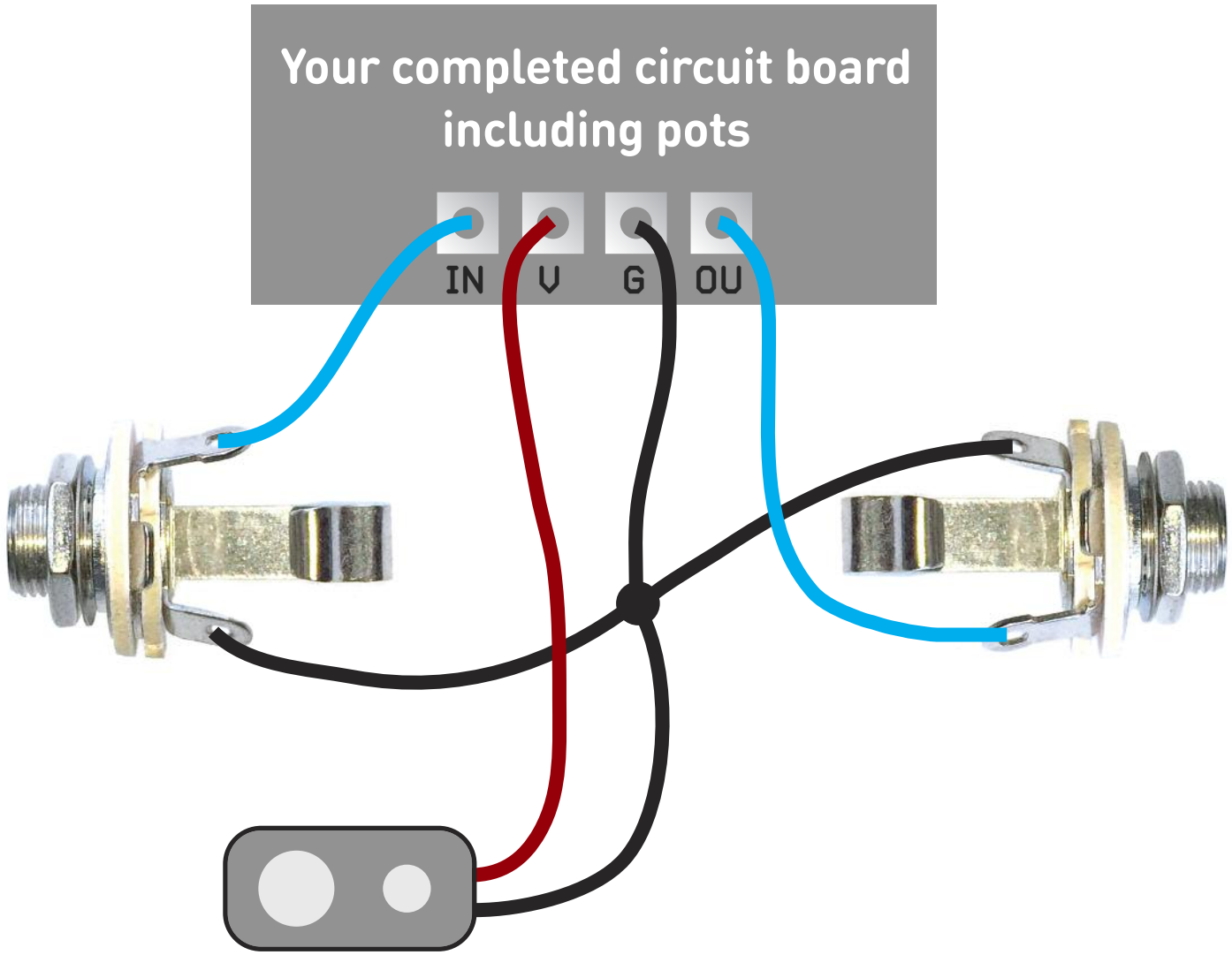

Wire it up (if using a daughterboard please refer to the relevant document)

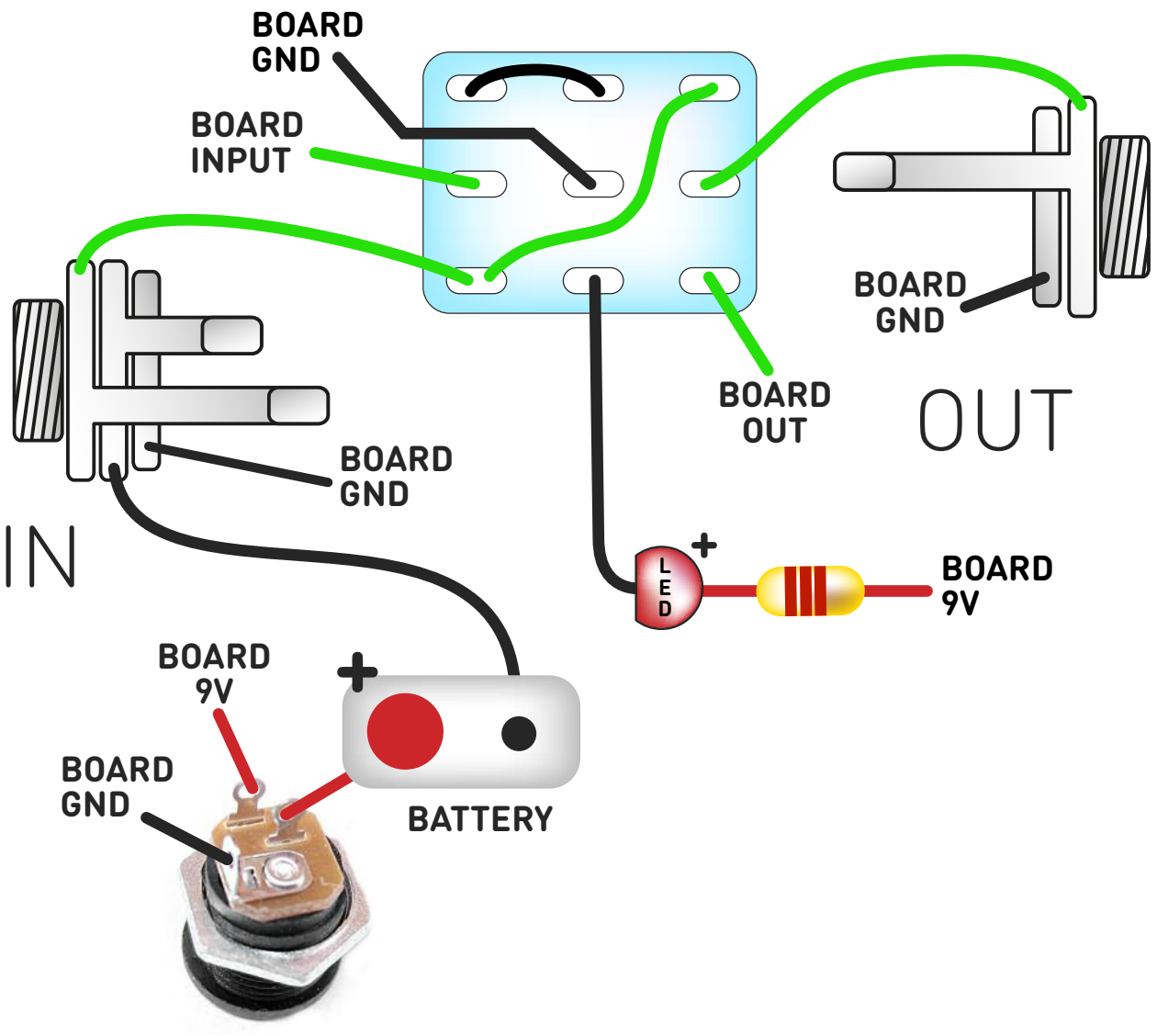

Wiring shown above will disconnect the battery when you remove the jack plug from the input, and also when a DC plug is inserted.

The Board GND connections don't all have to directly attach to the board. You can run a couple of wires from the DC connector, one to the board, another to the IN jack, then daisy chain that over to the OUT jack.

It doesn't matter how they all connect, as long as they do.

This circuit is standard, Negative GND. Your power supply should be Tip Negative / Sleeve Positive. That's the same as your standard pedals (Boss etc), and you can safely daisy-chain your supply to this pedal.

Drilling template

Hammond 1590B

60 x 111 x 31mm

It's a good idea to drill the pot and toggle switch holes 1mm bigger if you're board-mounting them.
Wiggle room = good!

Recommended drill sizes:

Pots	7mm
Jacks	10mm
Footswitch	12mm
DC Socket	12mm
Toggle switches	6mm

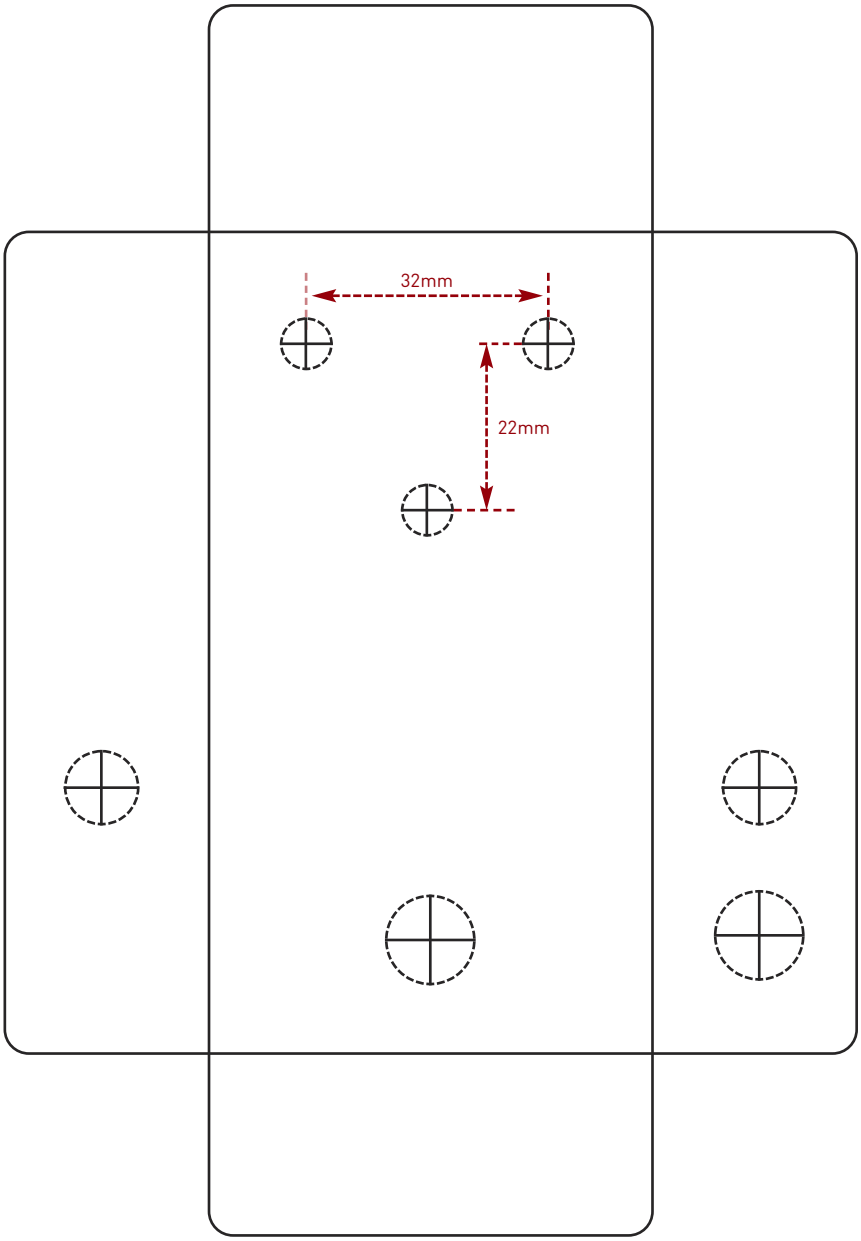

This template is a rough guide only. You should ensure correct marking of your enclosure before drilling. You use this template at your own risk.
Pedal Parts Ltd can accept no responsibility for incorrect drilling of enclosures.

FuzzDog.co.uk