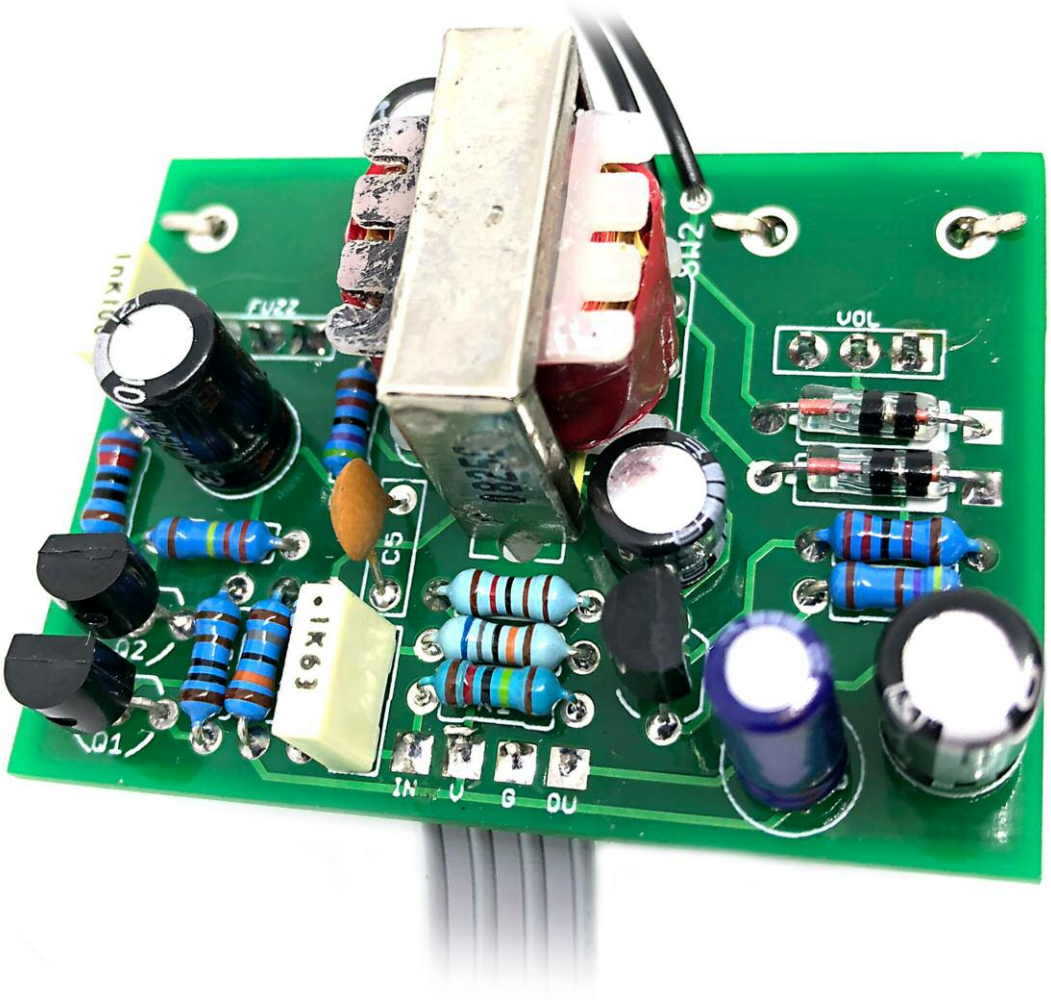

Octavia

Tycobrae's octave-up fuzz

Important notes

If you're using any of our footswitch daughterboards, DOWNLOAD THE DAUGHTERBOARD DOCUMENT

- Download and read the appropriate build document for the daughterboard as well as this one BEFORE you start.
- DO NOT solder the supplied Current Limiting Resistor (CLR) to the main circuit board even if there is a place for it. This should be soldered to the footswitch daughterboard.

POWER SUPPLY

Unless otherwise stated in this document this circuit is designed to be powered with 9V DC.

COMPONENT SPECS

Unless otherwise stated in this document:

- Resistors should be 0.25W. You can use those with higher ratings but check the physical size of them.
- Electrolytics caps should be at least 25V for 9V circuits, 35V for 18V circuits. Again, check physical size if using higher ratings.

LAYOUT CONVENTIONS

Unless otherwise stated in this document, the following are used:

- **Electrolytic capacitors:**
  Long leg (anode) to square pad.
- **Diodes:**
  Striped leg (cathode) to square pad.
- **ICs:**
  Square pad indicates pin 1.

Schematic + BOM

Based on the NPN variation
at Fuzz Central

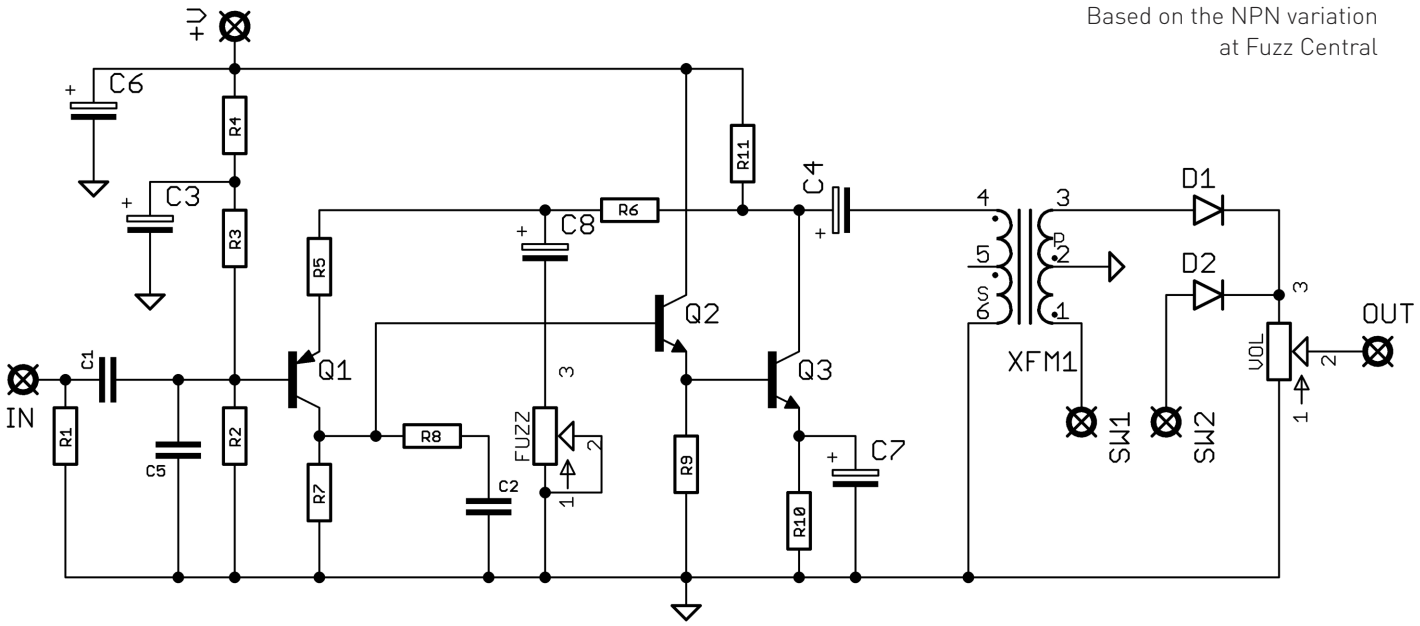

R1	1M
R2	680K
R3	820K
R4	180K
R5	1K
R6	47K
R7	220K
R8	220R
R9	22K
R10	470R
R11	1K2

C1	100n
C2	1n
C3	22u elec
C4	33u elec
C5	150p
C6	47u elec
C7	100u elec
C8	100u elec

D1-2	1N34A
Q1	2N5087*
Q2-3	2N4401*
XFM1	42TM022**
FUZZ	1KB
VOL	500KA

*Other transistors can be used. We tried 2N5089 for Q2-3 and it sounded great. Q1 is PNP BJT, Q2-3 are NPN BJT. Check your pinouts if using substitutes.

**We've tried the more readily available 42TM018 and there was no discernable difference.

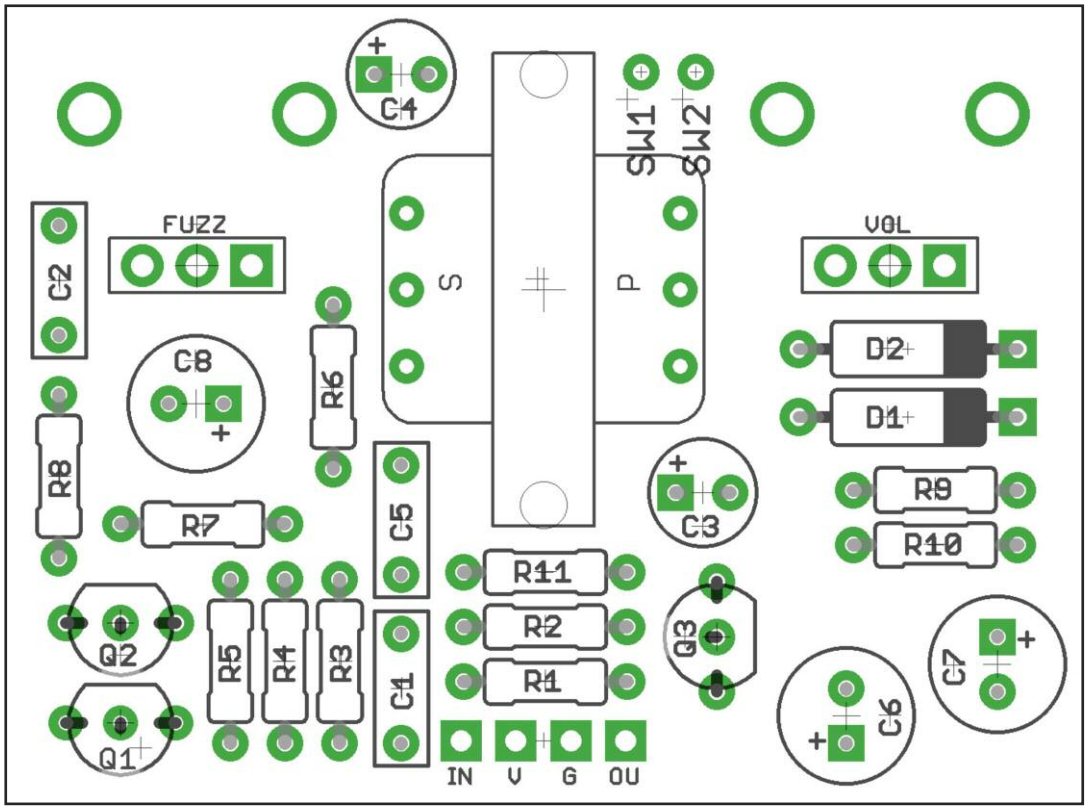

The power and signal pads on the PCB conform to the FuzzDog Direct Connection format, so can be paired with the appropriate daughterboard for quick and easy offboard wiring. Check the separate daughterboard document for details.

Be very careful when soldering the LED, diodes and transistors. They're very sensitive to heat. You should use some kind of heat sink (crocodile clip or reverse action tweezers) on each leg as you solder them. Keep exposure to heat to a minimum (under 2 seconds).

The glass casing on 1N34A diodes is very delicate. Take great care when bending the legs. It's best to use needle-nosed pliers to hold the leg right up against the body, then bend the leg with your finger, letting the pliers take the stress away from the glass case.

Snap the small metal tags off the pots so they can be mounted flush in the box.

We've gone for 9mm pots on this circuit as it worked out better to accommodate the transformer. You can wire in 16mm pots if you prefer, but you'll have to find a way to secure the circuit in the enclosure.

Make sure you get the transformer the right way around. There should be a P on it to indicate the primary.

OCTAVE SWITCH

If you want to include the optional octave-off switch, simply wire pads SW1 and SW2 to your switch of choice. You only need a SPST, but SPDT is fine - connect one pad to the middle lug, the other to either of the outer lugs.

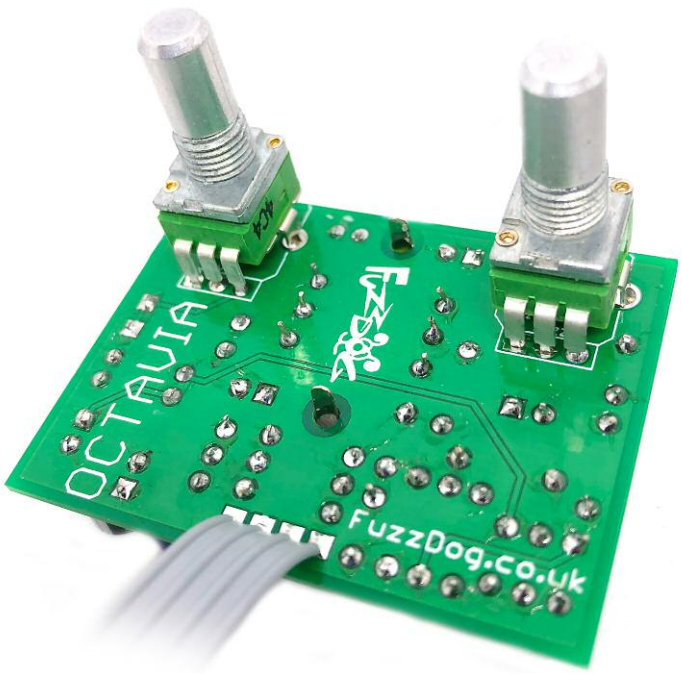

Test the board!

Check the relevant daughterboard document for more info before you undertake this stage.

UNDER NO CIRCUMSTANCES will troubleshooting help be offered if you have skipped this stage. No exceptions.

Once you've finished the circuit it makes sense to test is before starting on the switch and LED wiring. It'll cut down troubleshooting time in the long run. If the circuit works at this stage, but it doesn't once you wire up the switch - guess what? You've probably made a mistake with the switch.

Solder some nice, long lengths of wire to the board connections for 9V, GND, IN and OUT. Connect IN and OUT to the jacks as shown. Connect all the GNDs together (twist them up and add a small amount of solder to tack it). Connect the battery + lead to the 9V wire, same method. Plug in. Go!

If you're using a ribbon cable you can tack the wires to the ends of that. It's a lot easier to take them off there than it is do desolder wires from the PCB pads.

If it works, carry on and do your switch wiring. If not... aw man. At least you know the problem is with the circuit. Find out why, get it working, THEN worry about the switch etc.

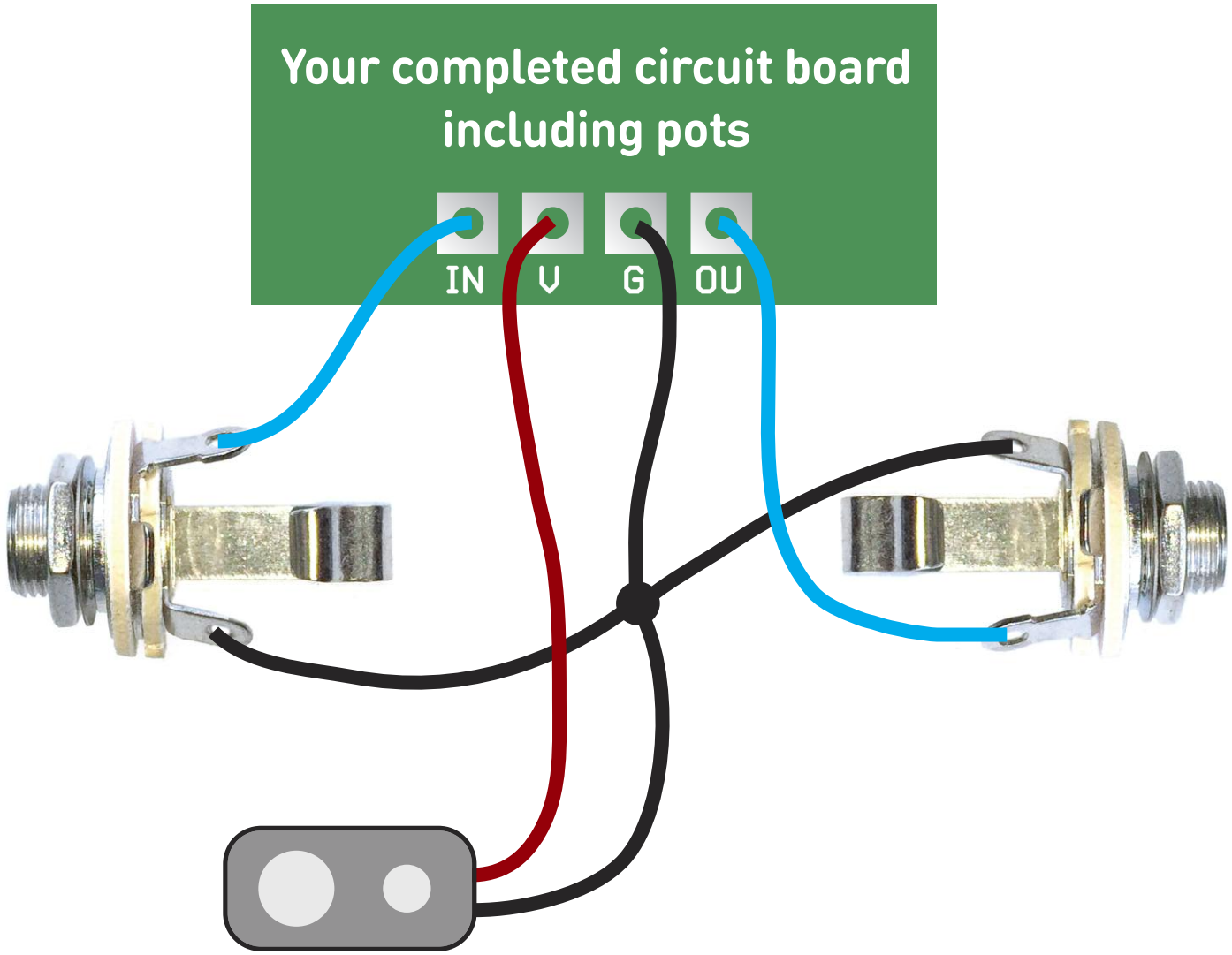

Wire it up (if using a daughterboard please refer to the relevant document)

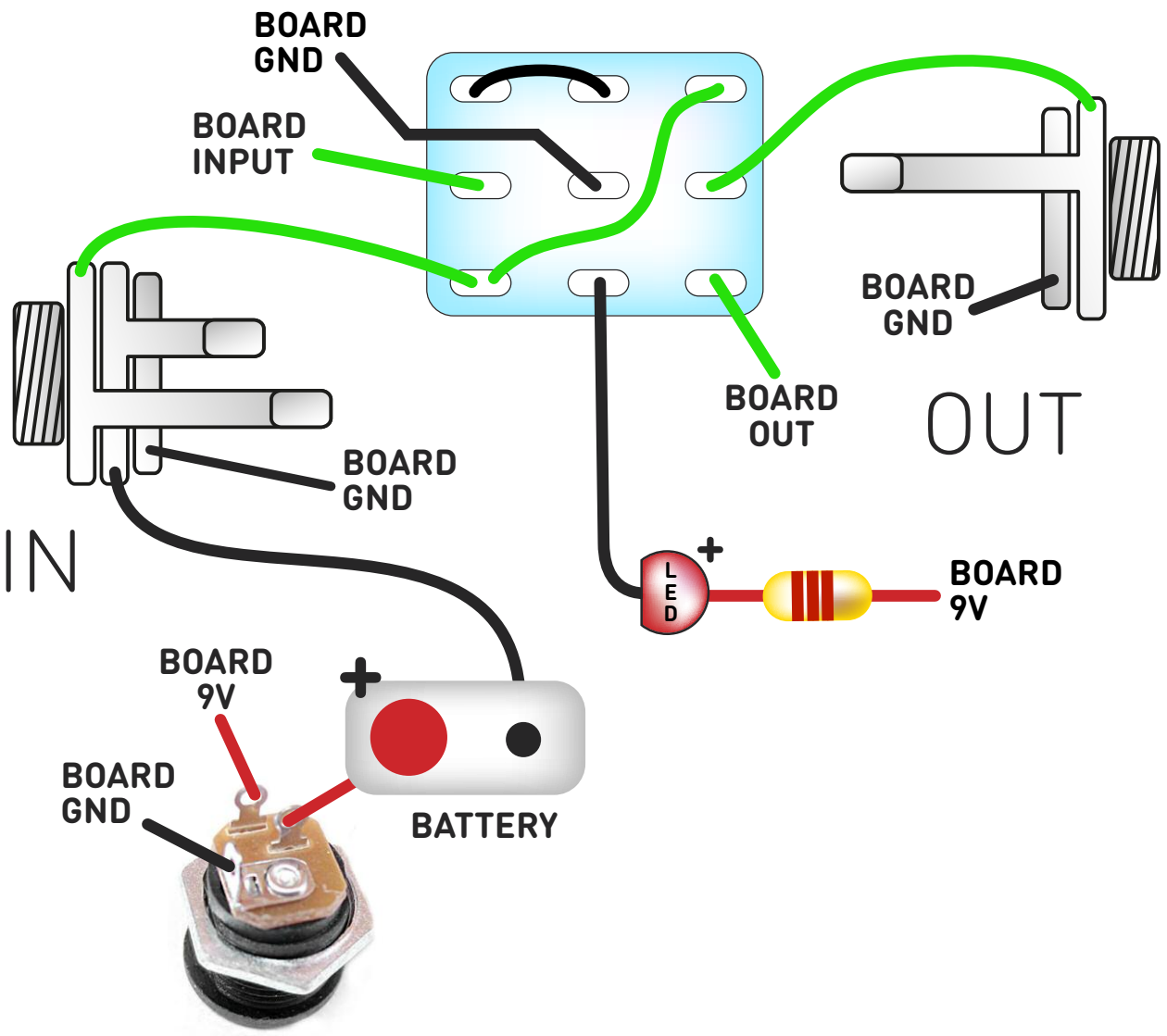

Wiring shown above will disconnect the battery when you remove the jack plug from the input, and also when a DC plug is inserted.

The Board GND connections don't all have to directly attach to the board. You can run a couple of wires from the DC connector, one to the board, another to the IN jack, then daisy chain that over to the OUT jack.

It doesn't matter how they all connect, as long as they do.

This circuit is standard, Negative GND. Your power supply should be Tip Negative / Sleeve Positive. That's the same as your standard pedals (Boss etc), and you can safely daisy-chain your supply to this pedal.

Drilling template

Hammond 1590B2

60 x 111 x 34mm

It's a good idea to drill the pot and toggle switch holes 1mm bigger if you're board-mounting them. Wiggle room = good!

Recommended drill sizes:

Pots	7mm
Jacks	10mm
Footswitch	12mm
DC Socket	12mm
Toggle Switch	6mm

There's no fixed position for the optional toggle switch.

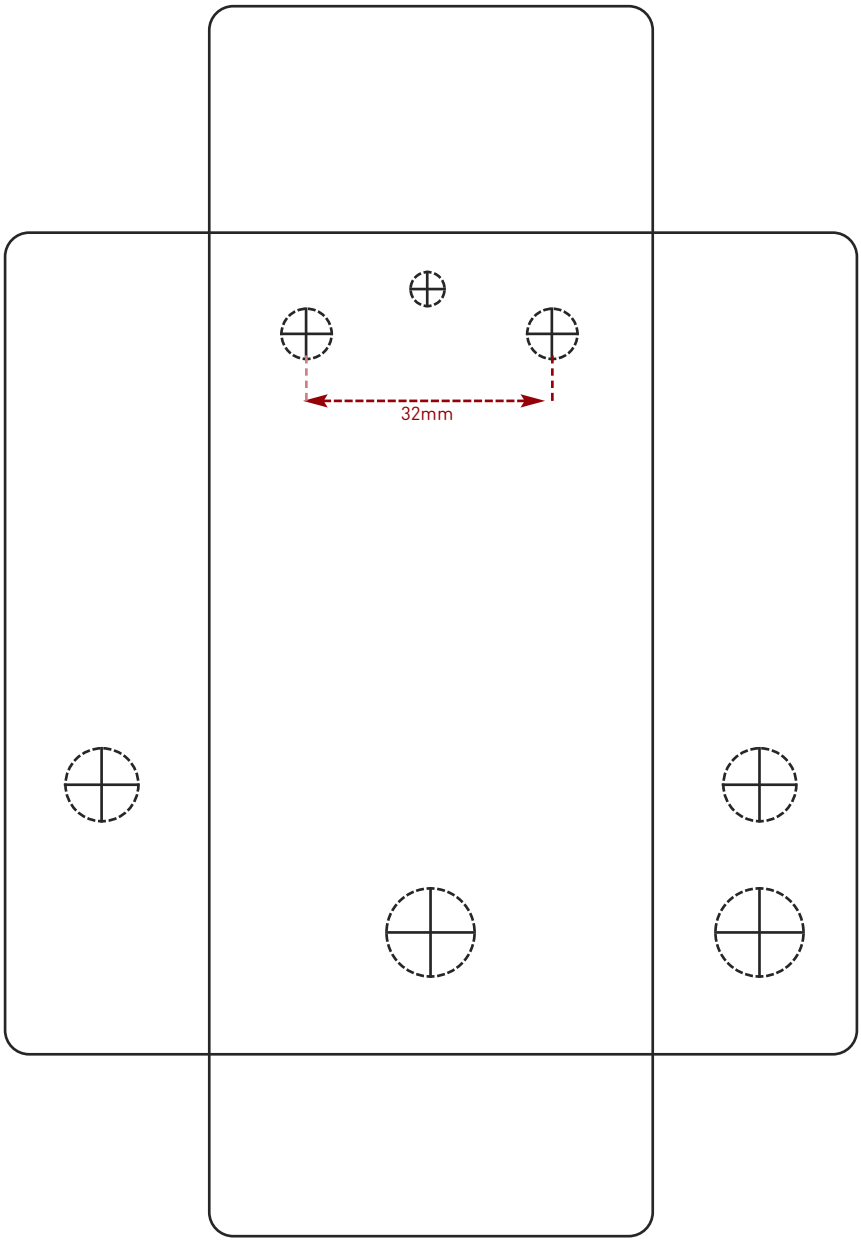

This template is a rough guide only. You should ensure correct marking of your enclosure before drilling. You use this template at your own risk.
Pedal Parts Ltd can accept no responsibility for incorrect drilling of enclosures.

FuzzDog.co.uk