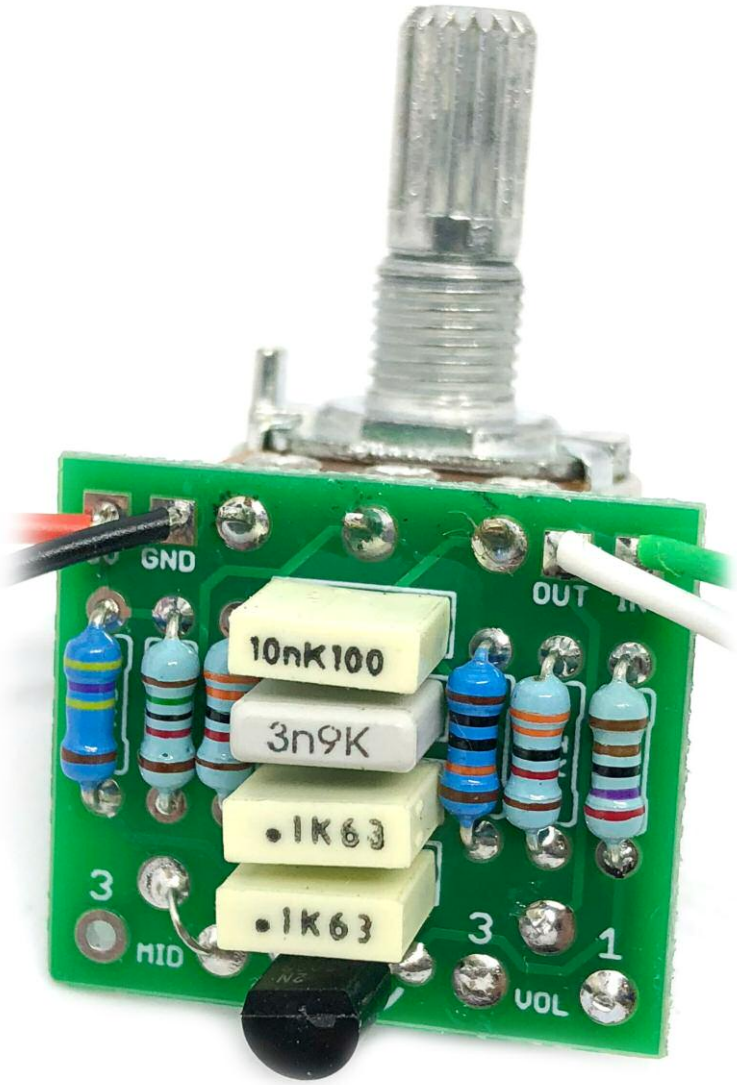

MUFF Tone Stack

Add some tonal delight to your favourite circuits

Important notes

If you're using any of our footswitch daughterboards, DOWNLOAD THE DAUGHTERBOARD DOCUMENT

- Download and read the appropriate build document for the daughterboard as well as this one BEFORE you start.
- DO NOT solder the supplied Current Limiting Resistor (CLR) to the main circuit board even if there is a place for it. This should be soldered to the footswitch daughterboard.

POWER SUPPLY

Unless otherwise stated in this document this circuit is designed to be powered with 9V DC.

COMPONENT SPECS

Unless otherwise stated in this document:

- Resistors should be 0.25W. You can use those with higher ratings but check the physical size of them.
- Electrolytics caps should be at least 25V for 9V circuits, 35V for 18V circuits. Again, check physical size if using higher ratings.

LAYOUT CONVENTIONS

Unless otherwise stated in this document, the following are used:

- **Electrolytic capacitors:**
  Long leg (anode) to square pad.
- **Diodes:**
  Striped leg (cathode) to square pad.
- **ICs:**
  Square pad indicates pin 1.

Full Schematic + PCB

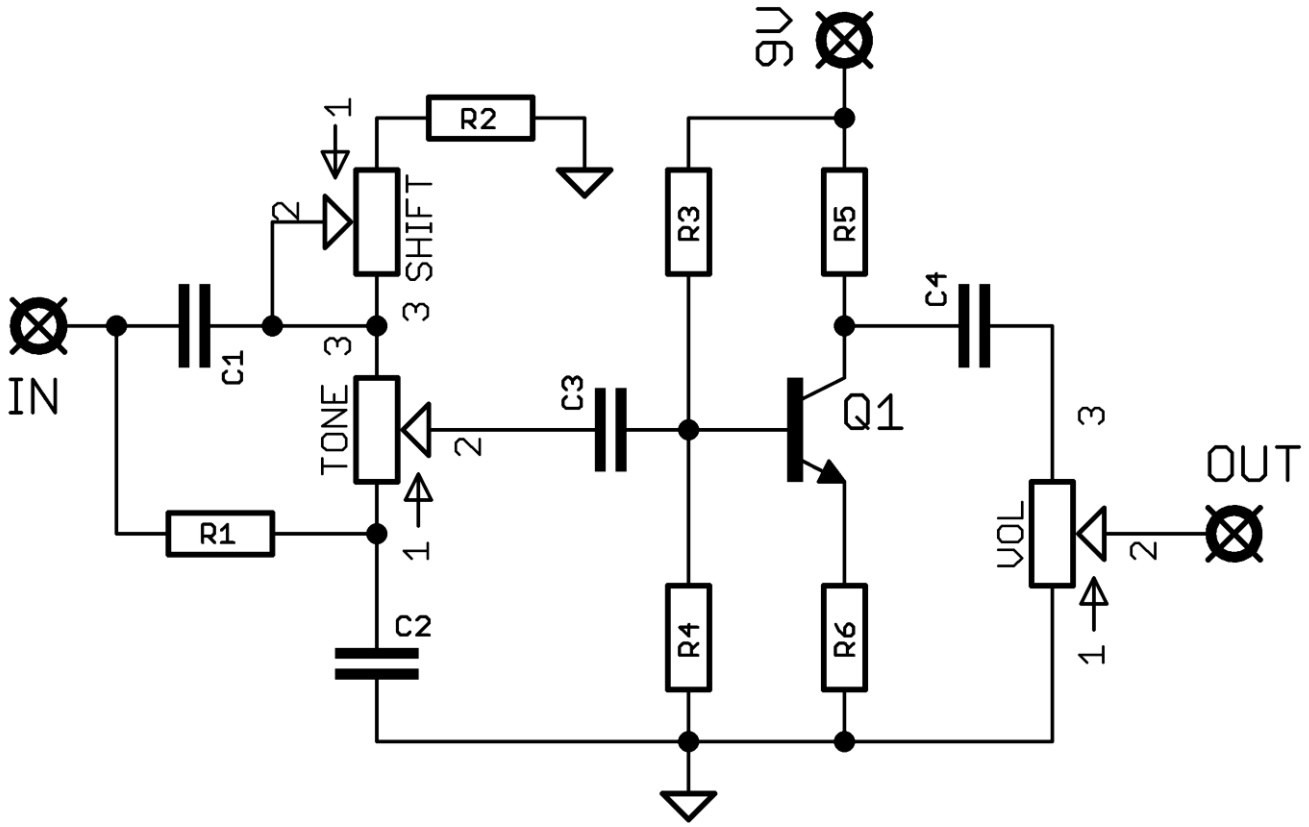

The above schematic shows ALL the parts that are on the PCB. You can build several tone variations with this PCB, as shown in the next few pages.

In each case Q1 can be replaced with your preferred BJT, such as 2N3904.

C3 can be replaced with whichever value suits your circuit.

The PCB is quite tight, and oops! we didn't allow for the little nobbly bits of the pot pins.

Either snip off the parts ringed below right, or a much better way is to just keep the pot slightly away from the PCB.

Standard BMP tone, no recovery

Simple passive tone stack with scooped mids. This will drastically reduce your signal level, so only use in circuits where you will recover some gain afterwards.

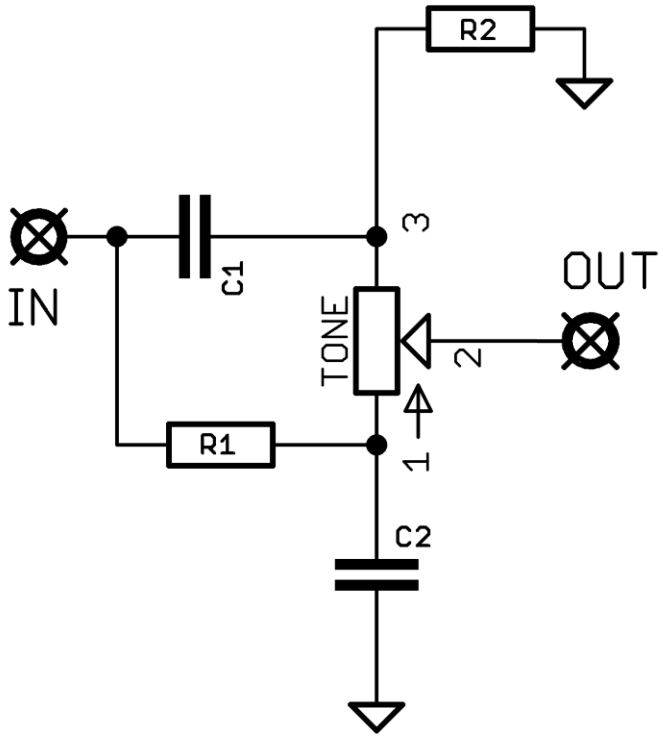

Add jumpers as shown below

R1	39K
R2	22K
R3	Empty
R4	Empty
R5	Empty
R6	Empty
C1	3n9
C2	10n
C3	Empty
C4	Empty
Q1	Empty
TONE	100KB
MID	Empty
VOL	Empty

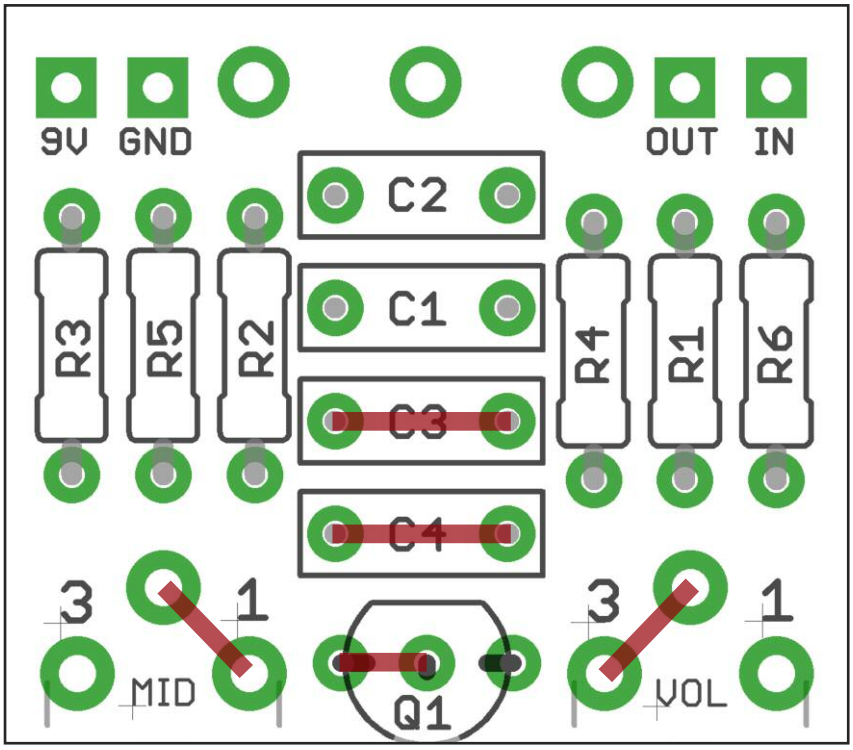

Standard BMP tone + gain recovery

Scooped mids tone with a gain recovery stage. The level of this is adjustable with the volume trimmer. The values below are for the LPB boost circuit which gives more output than the standard Muff values. Better to have more juice on tap and adjust with the volume than not enough...

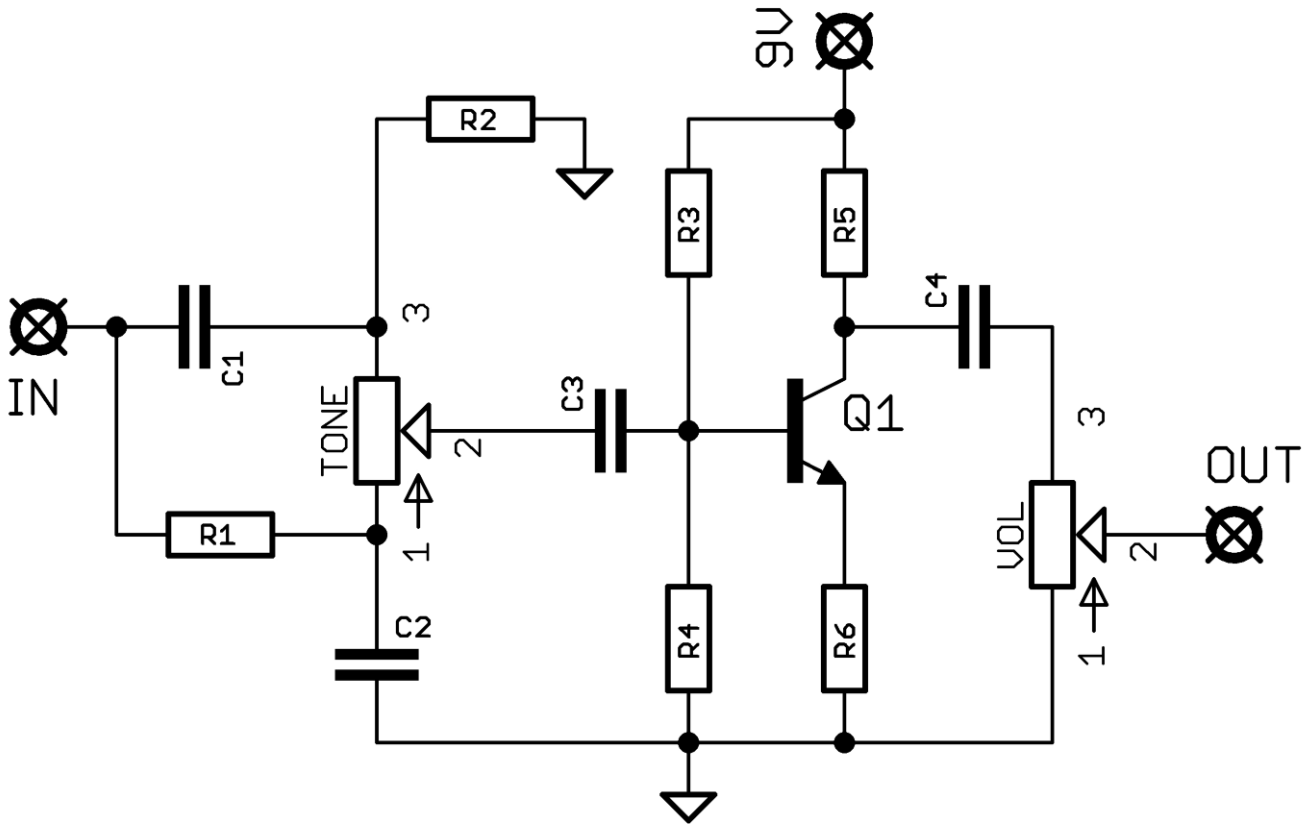

Add jumper as shown below

R1	39K
R2	22K
R3	1M
R4	100K
R5	10K
R6	390R
C1	3n9
C2	10n
C3	100n
C4	100n
Q1	2N5088 or similar
TONE	100KB
MID	Empty
VOL	100K Trim

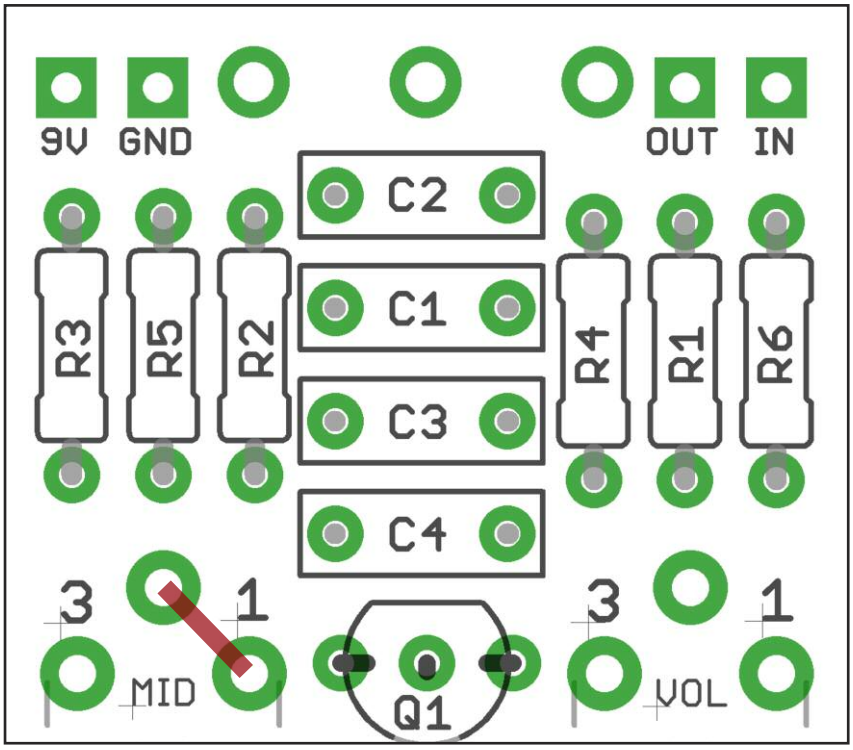

AMZ Presence, no gain recovery

AMZ FX (muzique.com) variation on the BMP tone with adjustable mids. Versions 1 and 2 give different responses, so check out the info at the link below to see what suits you best. This will drastically reduce your signal level, so only use in circuits where you will recover some gain afterwards.

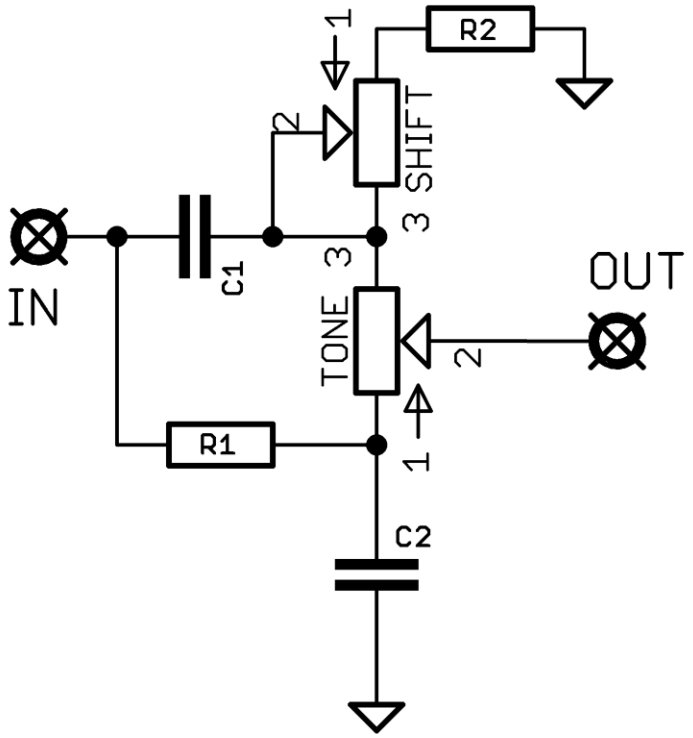

	V1	V2
R1	39K	470K
R2	3K3	3K3
R3	Empty	Empty
R4	Empty	Empty
R5	Empty	Empty
R6	Empty	Empty
C1	10n	15n
C2	10n	1n5
C3	Empty	Empty
C4	Empty	Empty
Q1	Empty	Empty
TONE	100KB	250KA
MID	22-25K	22-25K
VOL	Empty	Empty

Add jumpers as shown below

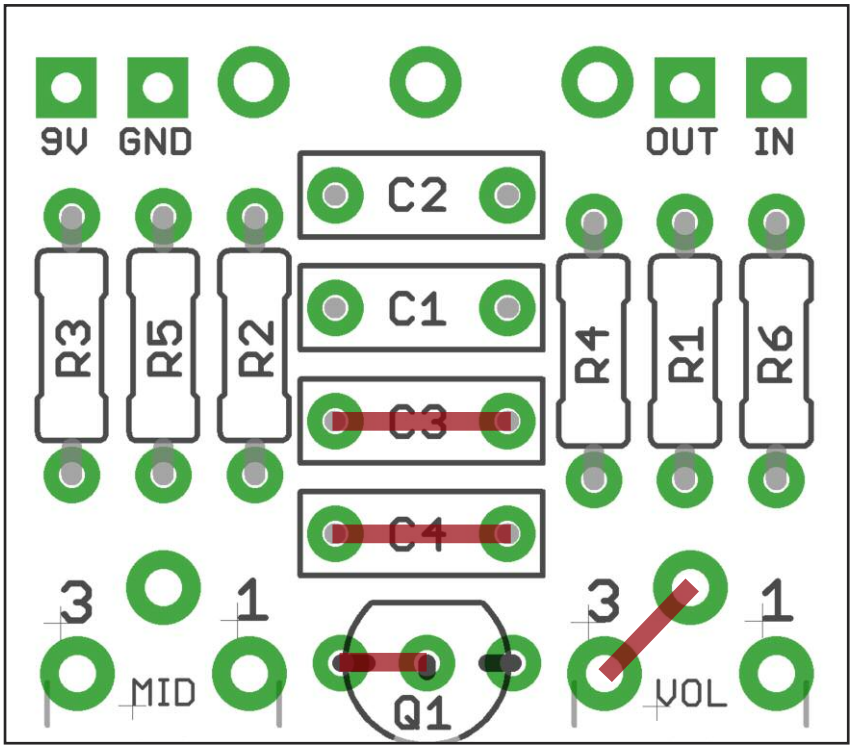

AMZ Presence + gain recovery

AMZ FX (muzique.com) variation on the BMP tone with adjustable mids. Versions 1 and 2 give different responses, so check out the info at the link below to see what suits you best. LPB recovery stage with adjustable level.

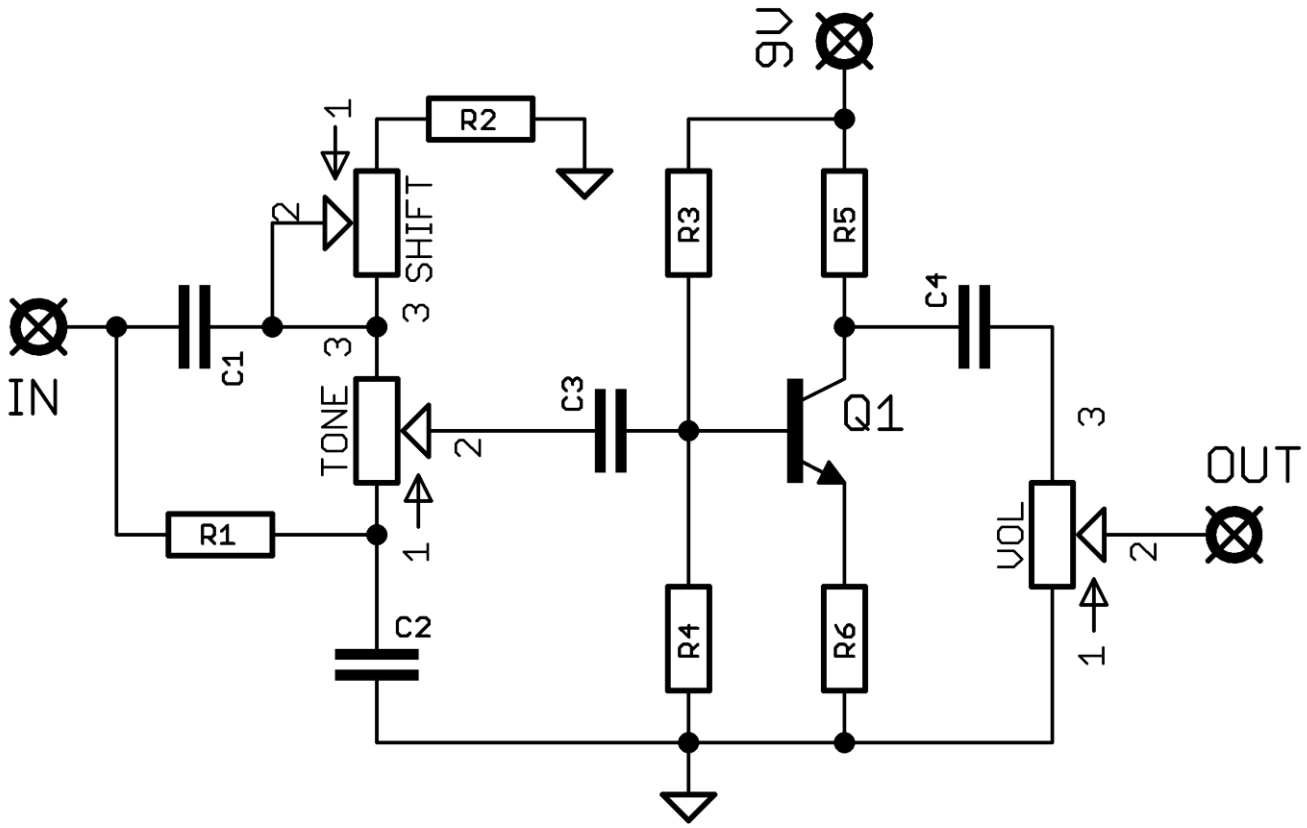

No jumpers required

	V1	V2
R1	39K	470K
R2	3K3	3K3
R3	1M	1M
R4	100K	100K
R5	10K	10K
R6	390R	390R
C1	10n	15n
C2	10n	1n5
C3	100n	100n
C4	100n	100n
Q1	2N5088	2N5088
TONE	100KB	250KA
MID	22-25K	22-25K
VOL	100K	100K

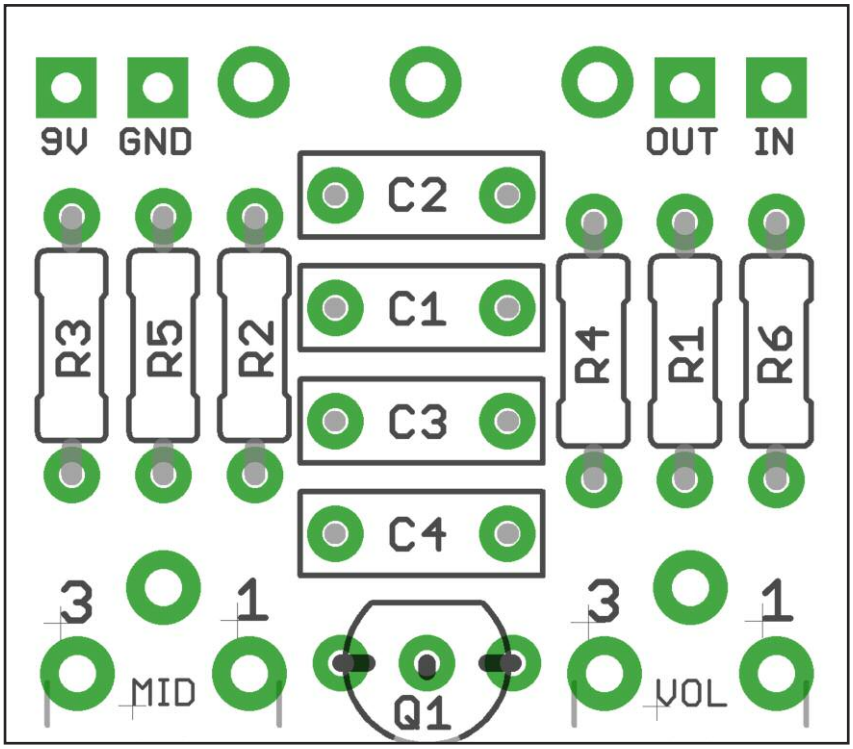

Don’t want a volume trimmer?

You can build a normal BMP recovery stage which is designed to approximately compensate for the signal level loss caused by the tone section. This eliminates the need for the volume trimmer.

To do this on either of the versions with recovery section previously detailed, replace the parts below and add a jumper as shown.

R3	470K
R4	100K
R5	12K
R6	2K7

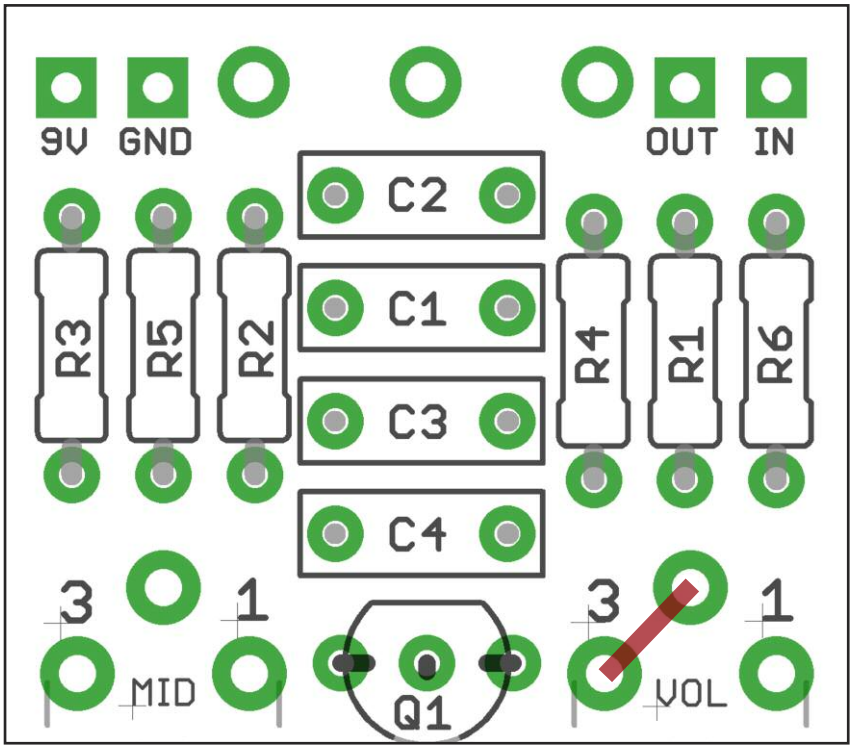

External mids control?

Just wire a pot up to the MID pads if you want mids control outside the box.

Implementation

There are no hard and fast rules about implementing this tone circuit. How it is incorporated into an existing circuit depends on what that circuit is. You'll get different results from it being positioned in different places in a circuit. We'll give some examples, but it's really up to you.

To replace the tone control in our Rodent:

Leave out the Filter pot and C8. Jumper R6.
Connect the BMP Tone IN pad to FILT pad 1, OUT to FILT pad 3.
If you were to use a version with gain recovery you'd also need to connect the 9V and GND pads to the supply.

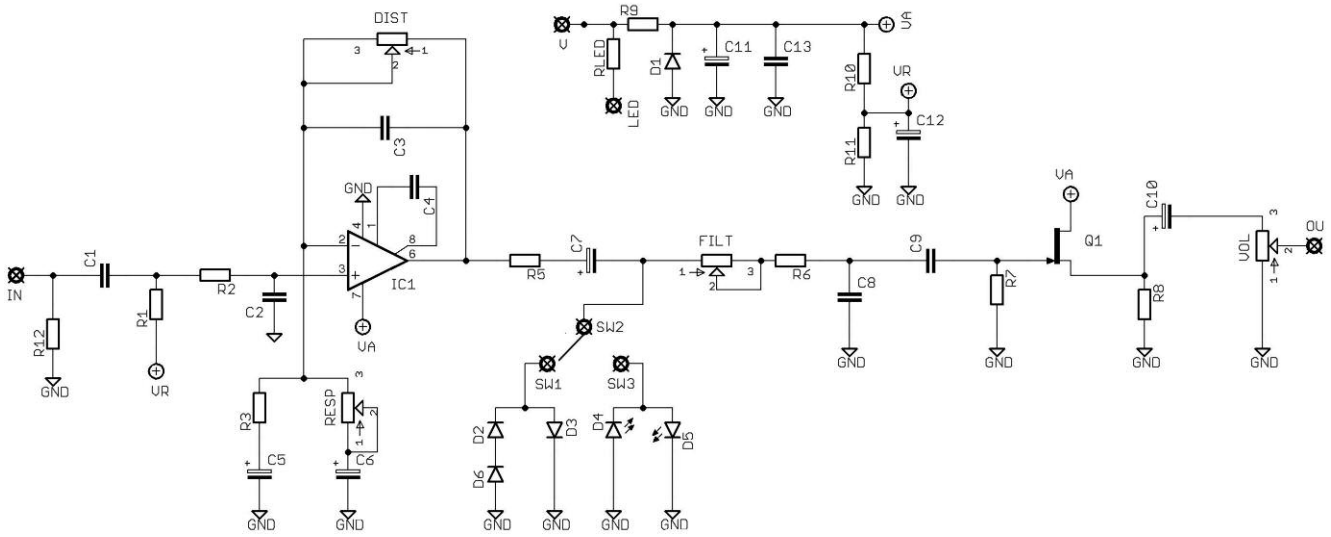

To add tone to the end of a circuit, i.e. our Sunny-T:

Don't connect pin 3 of the volume pot.
Connect the BMP Tone IN pad to Volume pad 3, OUT to pin 3 of the volume pot.
Again, 9V and GND connect to supply if you're using gain recovery.