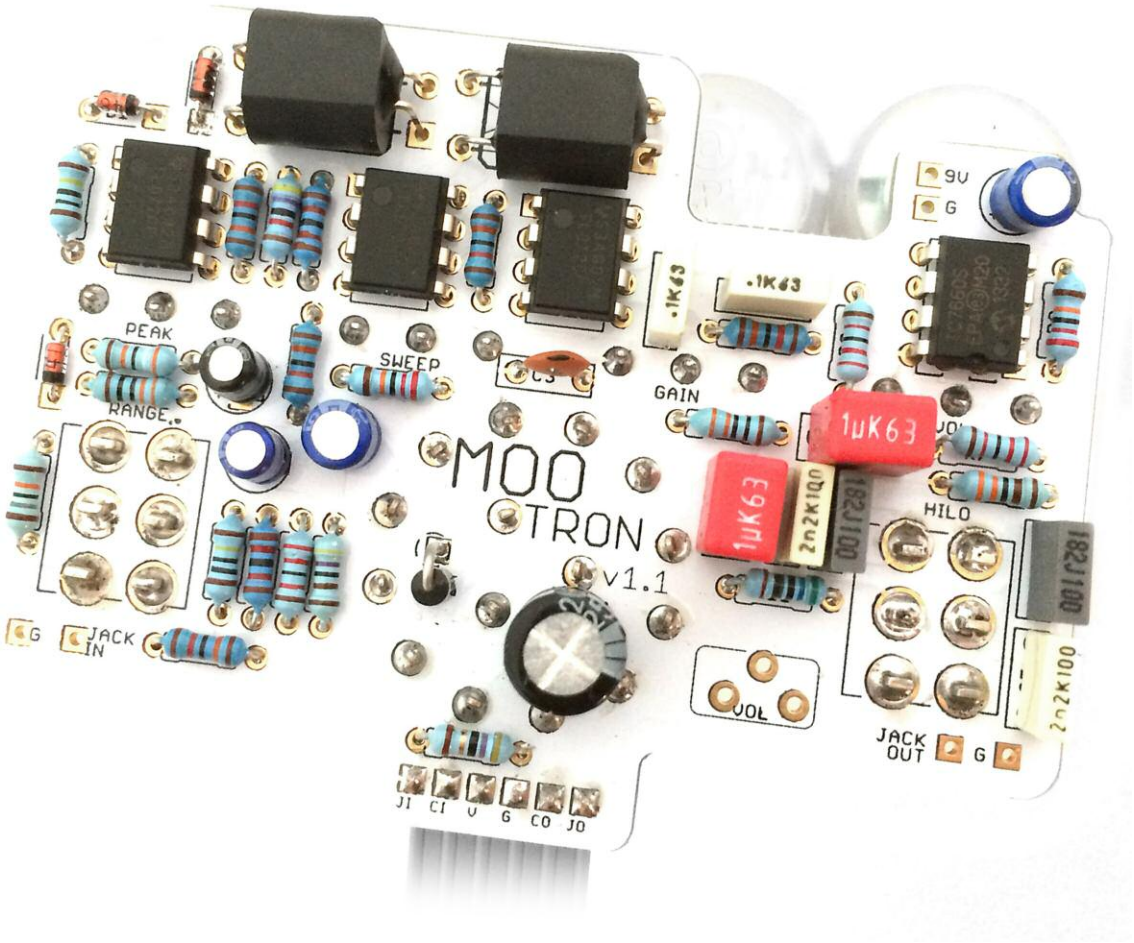

Moo-Tron

Every 70's funk riff you ever heard in one little box

Important notes

If you're using any of our footswitch daughterboards, DOWNLOAD THE DAUGHTERBOARD DOCUMENT

- Download and read the appropriate build document for the daughterboard as well as this one BEFORE you start.
- DO NOT solder the supplied Current Limiting Resistor (CLR) to the main circuit board even if there is a place for it. This should be soldered to the footswitch daughterboard.

COMPONENT SPECS

Unless otherwise stated in this document:

- Resistors should be 0.25W. You can use those with higher ratings but check the physical size of them.
- Electrolytics caps should be at least 25V for 9V circuits, 35V for 18V circuits. Again, check physical size if using higher ratings.

LAYOUT CONVENTIONS

Unless otherwise stated in this document, the following are used:

- **Electrolytic capacitors:**
  Long leg (anode) to square pad.
- **Diodes:**
  Striped leg (cathode) to square pad.
- **ICs:**
  Square pad indicates pin 1.

This is NOT an exact replica of a Mutron III. It is a combination of elements of Madbean's updated circuits, the Naughty Fish and the Nautilus, which will give you similar results to the Mutron III.

Schematic+ BOM

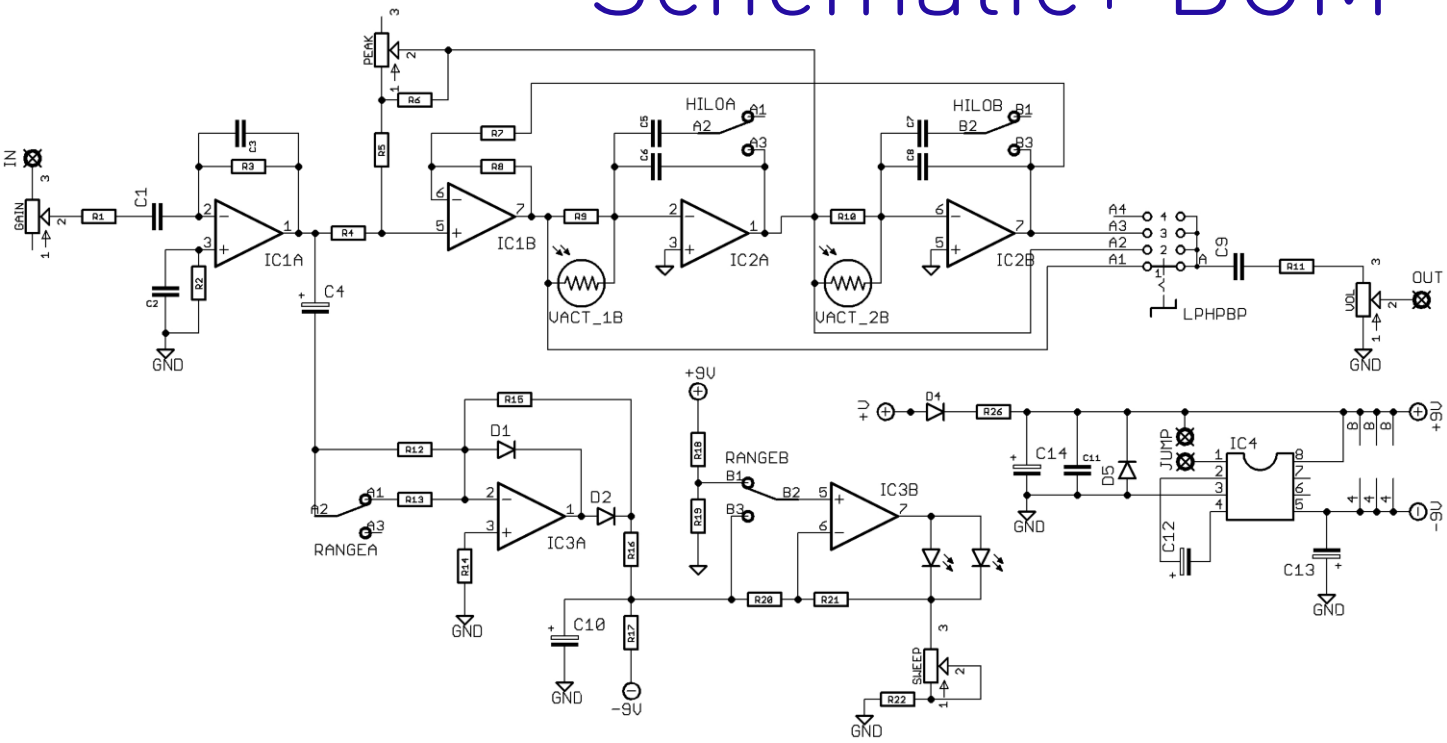

‡D4 and R26 are included for polarity protection and power smoothing. However, they will reduce the voltage available to the circuit. We recommend jumpering these two parts for better results. You can always add D4 to the DC socket, anode to GND, for polarity protection.

*Can also be a TC1044S or a LT1054. If using either the 7660 or 1044 you must place a jumper wire across the JUMP pads as shown on the image on the next page. Ensure you get an IC with the S suffix - these operate on a frequency outside the audible range.

**We've tried, really we have. Every LDR/LED combo we could get our hands on, and even a few different, easier to source vactols. Nothing works anywhere near as well as the VTL5C3. Lots of combinations will give great results on some settings, but nothing across the whole range like the VTL does. You need them. Feel free to do your own experimenting if you can't source them.

***Master volume control not found on the original. Adjusting the Gain pot can have a big effect on output level, so the Volume control is worth having. There are spots on there for a pot or an internal trimmer. Use only one or the other. External pot is recommended.

R1	3K3
R2	120K
R3	120K
R4	4K7
R5	12K
R6	390K
R7	22K
R8	22K
R9	220K
R10	220K
R11	560R
R12	22K
R13	12K
R14	1M
R15	1M
R16	330R
R17	47K
R18	180K
R19	120K
R20	120K
R21	120K
R22	330R
R26	47R‡

C1	1u
C2	100n
C3	10p
C4	2u2 elec
C5	2n2
C6	1n8
C7	2n2
C8	1n8
C9	1u
C10	4u7 elec
C11	100n
C12	10u elec
C13	10u elec
C14	100u elec

D1,2	1N4148
D4	1N4001‡
D5	12V Zener
IC1-3	TL072
IC4	TC7660S*
VAC1,2	VTL5C3**

GAIN	1MC
PEAK	250KB
SWEEP	5KB
VOL***	100KB
RANGE	DPDT ON-ON
HI-LO	DPDT ON-ON
LPHPBP	3P4T Rotary

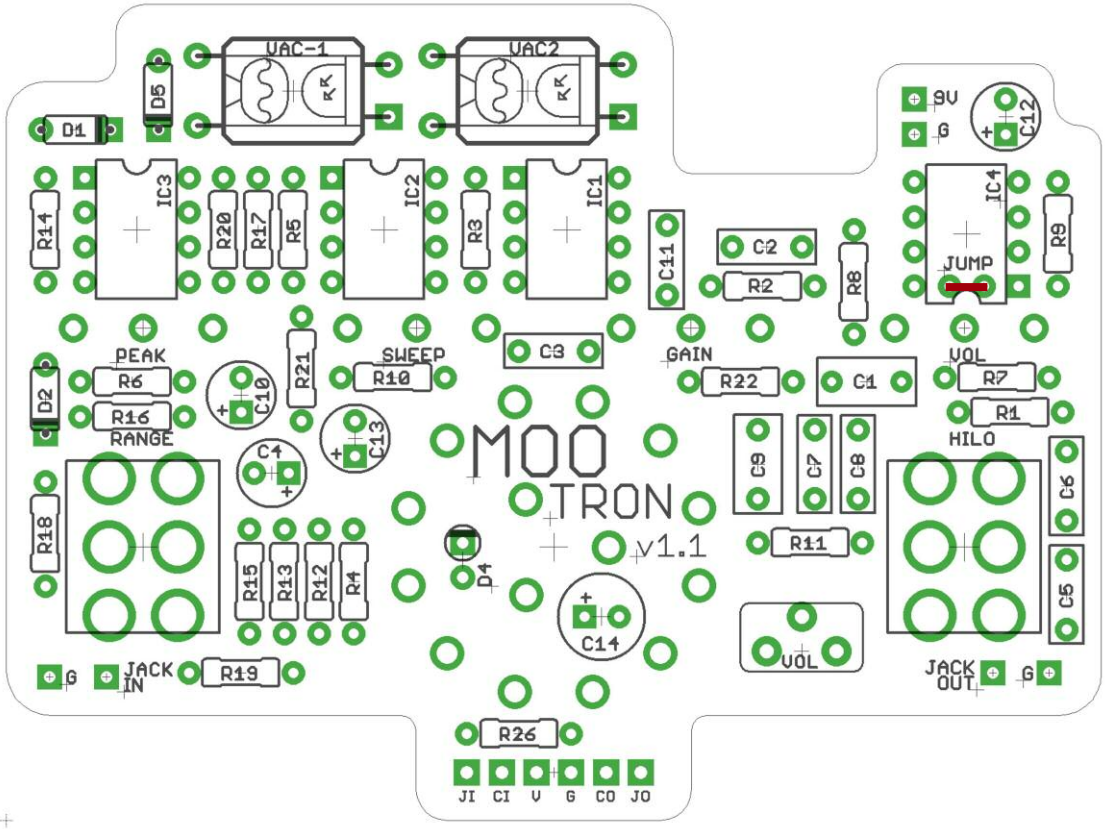

Red line above shows where the jumper wire goes if using a 7660 or a 1044 charge pump. Leave this out if using a 1054.

The power and signal pads on the PCB conform to the FuzzDog Direct Connection format, so can be paired with the appropriate daughterboard for quick and easy offboard wiring. Check the separate daughterboard document for details.

Be very careful when soldering the diodes, LED and vactrols. They're very sensitive to heat. You should use some kind of heat sink (crocodile clip or reverse action tweezers) on each leg as you solder them. Keep exposure to heat to a minimum (under 2 seconds). It's best to use a socket for the ICs.

The striped leg (cathode) of the diodes go into the square pads.

The long leg (anode) of the electrolytic capacitors go into the square pads.

LED+ on the Vactrols go to the square pads.

Snap the small metal tag off the pots so they can be mounted flush in the box. Same for the tag on the rotary switch.

Pots mount on the back side of the board. You can use vertical-mount pots or just wire up 'normal' ones. Ensure you get them all at the same height, and if there are no plastic covers on them make sure you have plenty of clearance between the pot body and the solder side of the PCB, otherwise you'll short out components. Best way to do this is get some thick cardboard and put it between the pots and the board when soldering. Remove it once they're in place.

To get them all the same height its best to solder a single pin of each so you have all three pots in place. See if they all line up ok. If not, simply melt the connection of any that aren't right and adjust. Much easier than trying to do it if all three pins are soldered. Once they're aligned, solder the other two pins of each pot.

Favourite technique at FDHQ is to put the pots into the holes on the top side of the enclosure to get everything lined up nicely while soldering.

Use a similar technique for the toggle switches - locate them in the enclosure holes and drop the board on top so they're in the right place.

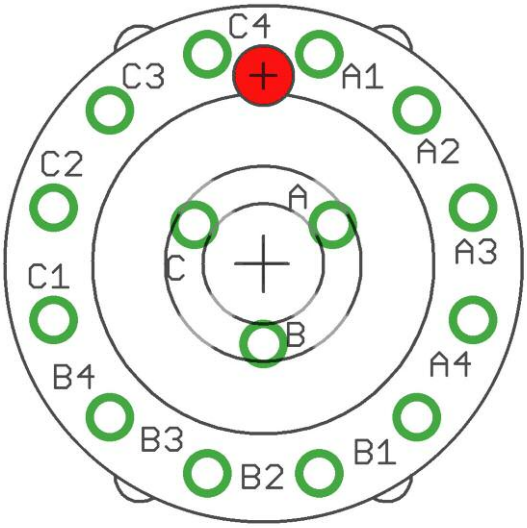

Before you mount your rotary switch you should set it so it only has three click positions. Take off the nut. You'll see a washer with a locator tab which will be inserted into a hole in the switch body, probably the third one. Move this so its in the second hole. The switch should now only have three positions/two clicks.

Now line up the round plastic indicator tab on the switch body (or the space where it was if you've already snipped it off) with the cross on the PCB screen print, shown in red here. The switch pins should now line up with the holes on the board.

Ensure you've soldered D4 and C14 in place before you attach the switch as it'll cover their solder pads

There are multiple pads for both V an GND connections. Both V pads are connected directly together, and all the GND pads are connected. Use only one of the V connections to connect your DC socket. The pads at the top of the board are positioned to make it more convenient if you have a DC socket on the top edge of the enclosure. If using a footswitch daughterboard you still have to link all four connections (IN, V, G, OU) as normal, as the LED requires power.

If you have your DC socket on the side edge near the footswtich you may find it easier to use the V and G pads on the bottom edge of the PCB. If using a daughterboard, use the V and G pads on that to connect with the DC socket in this case.

The extra GND pads on either side of the bottom edge are to make it more convenient to connect your jack socket GNDs.

You can use a 6-way connector between the daughterboard and the main PCB if you wish to wire your IN and OUT jacks from the main PCB.

Test the board!

Check the relevant daughterboard document for more info before you undertake this stage.

UNDER NO CIRCUMSTANCES will troubleshooting help be offered if you have skipped this stage. No exceptions.

Once you've finished the circuit it makes sense to test is before starting on the switch and LED wiring. It'll cut down troubleshooting time in the long run. If the circuit works at this stage, but it doesn't once you wire up the switch - guess what? You've probably made a mistake with the switch.

Solder some nice, long lengths of wire to the board connections for 9V, GND, IN and OUT. Connect IN and OUT to the jacks as shown. Connect all the GNDs together (twist them up and add a small amount of solder to tack it). Connect the battery + lead to the 9V wire, same method. Plug in. Go!

If you're using a ribbon cable you can tack the wires to the ends of that. It's a lot easier to take them off there than it is do desolder wires from the PCB pads.

If it works, carry on and do your switch wiring. If not... aw man. At least you know the problem is with the circuit. Find out why, get it working, THEN worry about the switch etc.

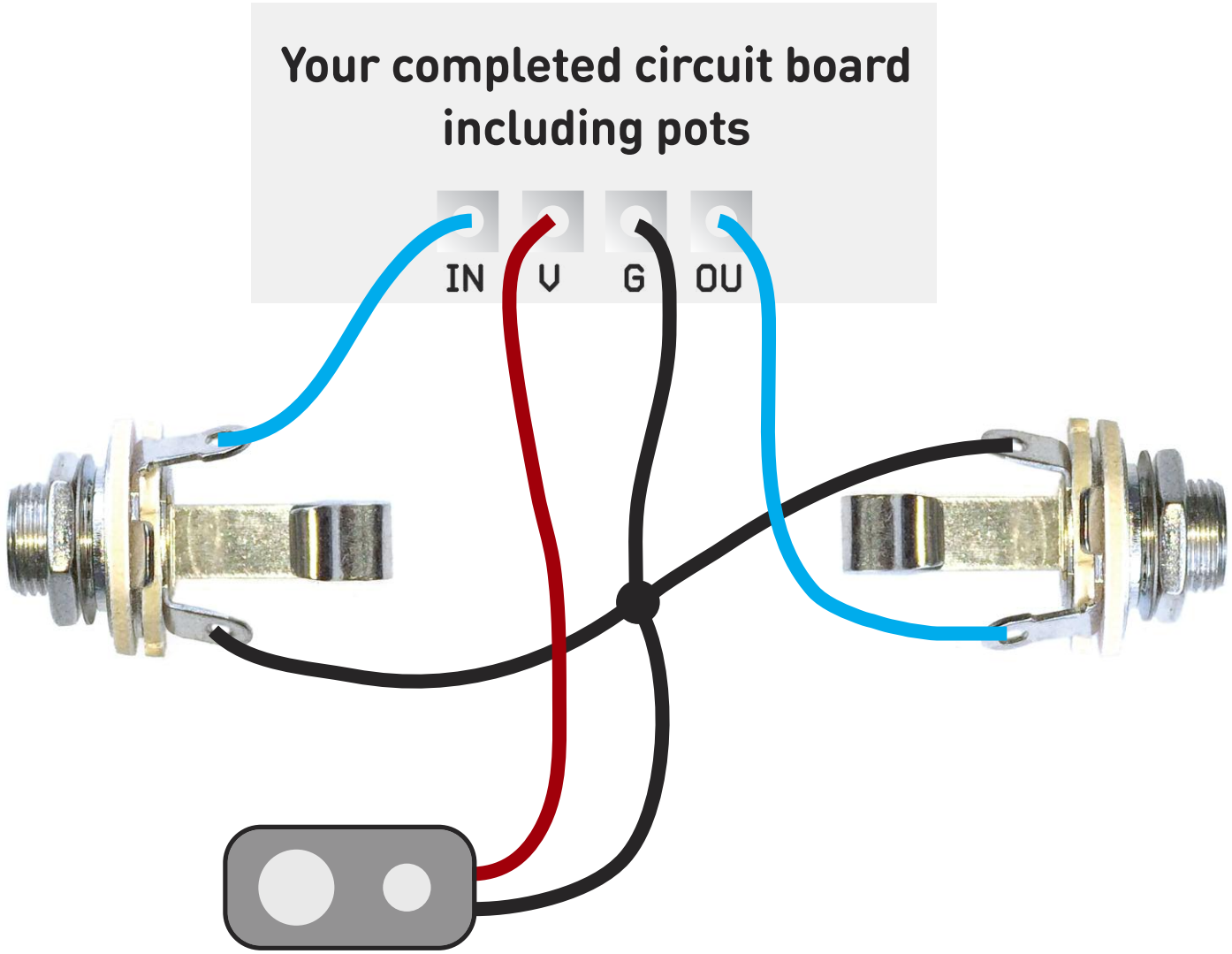

Wire it up - DC only version

(if using a daughterboard please refer to the relevant document)

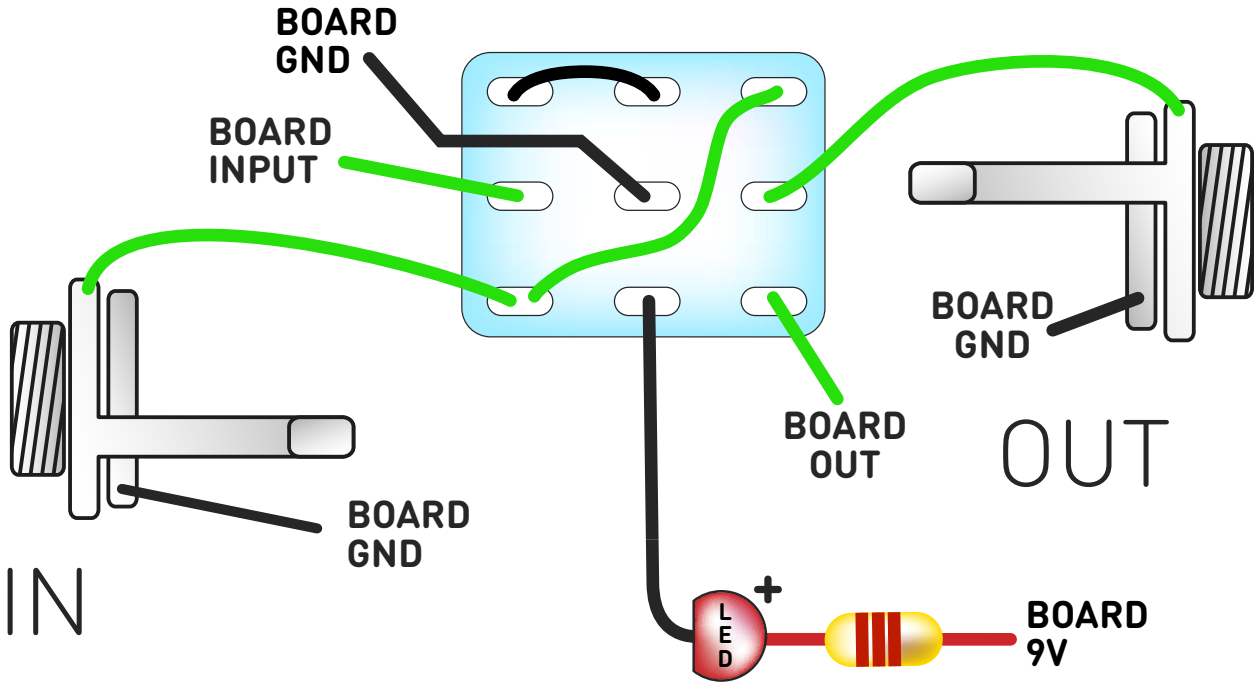

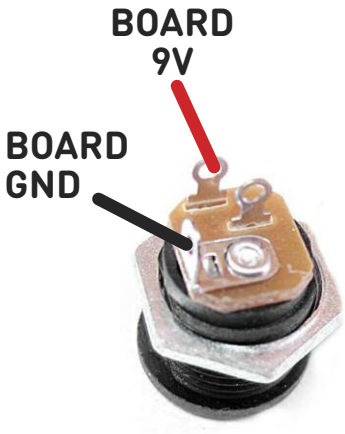

This circuit is standard, Negative GND. Your power supply should be Tip Negative / Sleeve Positive. That's the same as your standard pedals (Boss etc), and you can safely daisy-chain your supply to this pedal.

The BOARD GND connections don't all have to connect to one point. They can be daisy-chained around the circuit, using larger connection points (such as jack socket lugs) for multiple connections. As long as they all connect together in some way.

Wire it up - with battery

(if using a daughterboard please refer to the relevant document)

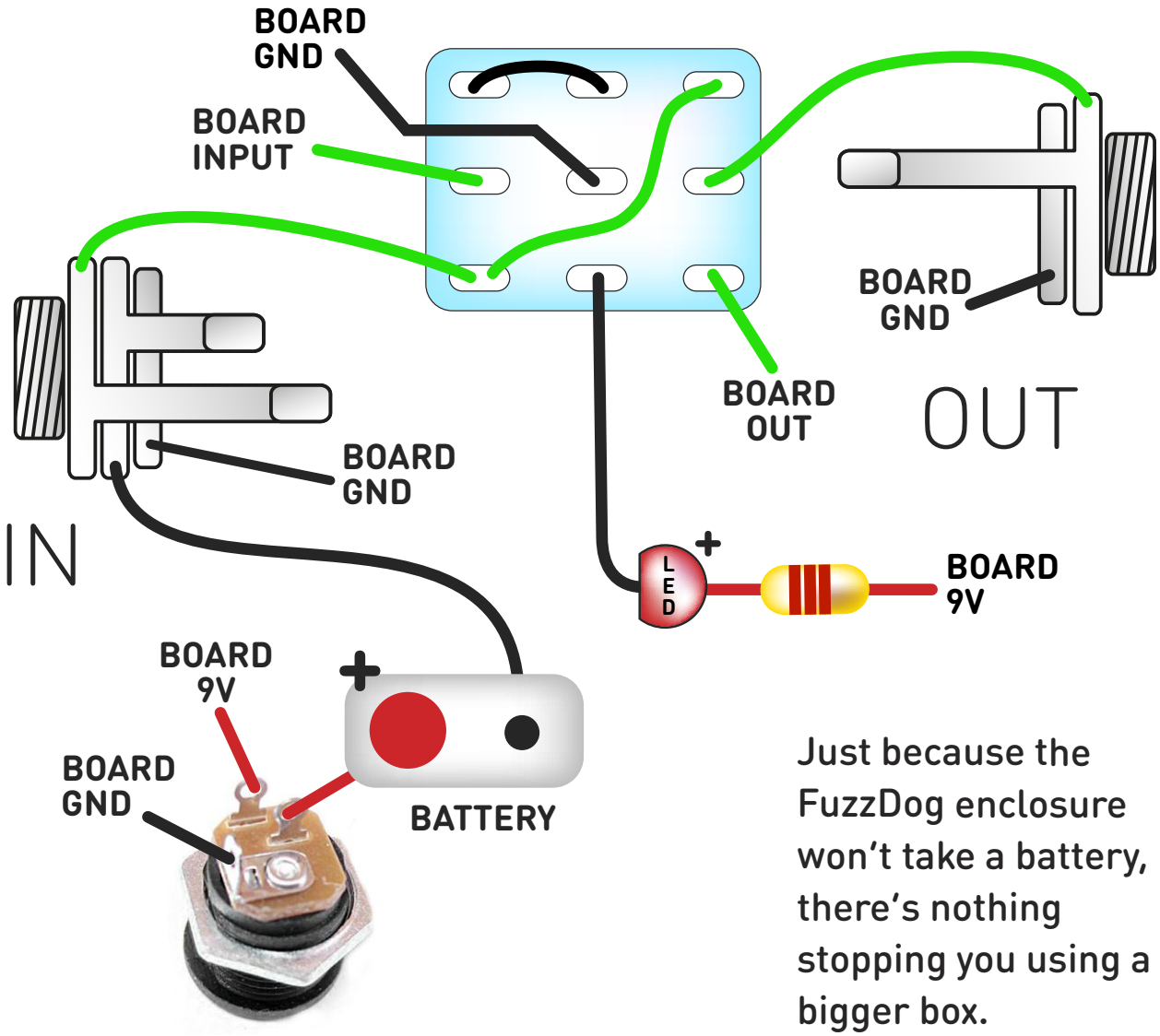

Just because the FuzzDog enclosure won't take a battery, there's nothing stopping you using a bigger box.

This circuit is standard, Negative GND. Your power supply should be Tip Negative / Sleeve Positive. That's the same as your standard pedals (Boss etc), and you can safely daisy-chain your supply to this pedal.

The BOARD GND connections don't all have to connect to one point. They can be daisy-chained around the circuit, using larger connection points (such as jack socket lugs) for multiple connections. As long as they all connect together in some way.

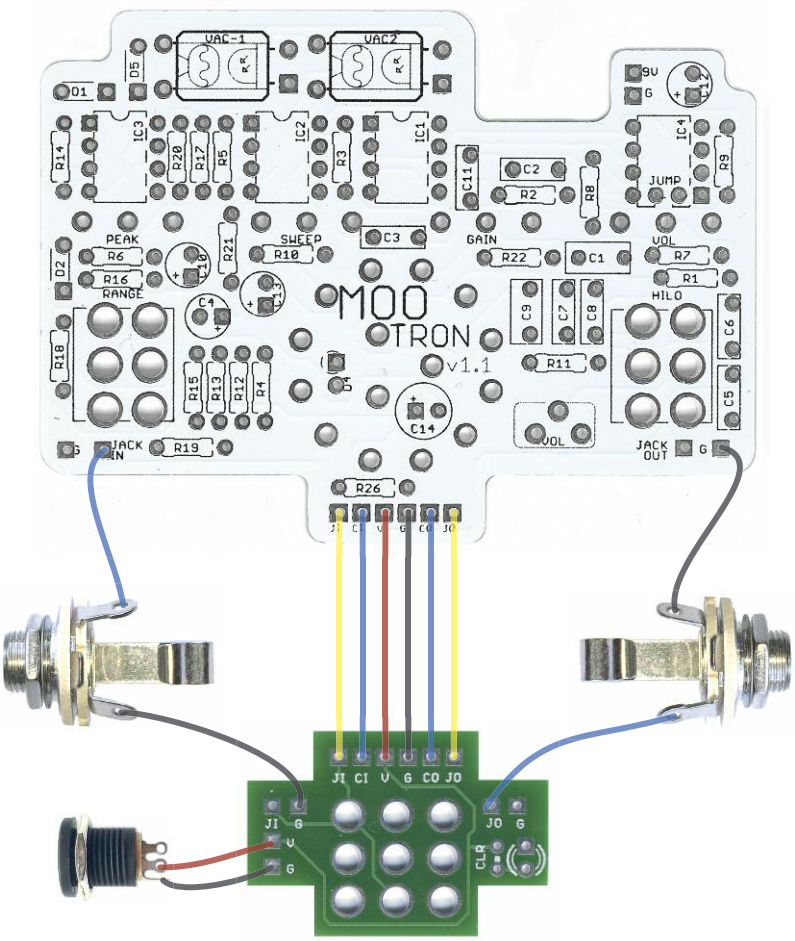

Both of these wiring configurations will work ok. Wiring all six of the daughterboard connection pads to the corresponding main PCB pads mean there are direct connections between the V, GND, Jack IN and Jack OUT pads on both boards, so any can be used.

If you connect using only the four main pads, ignoring the JI and JO pads, then the JACK IN and JACK OUT pads on the main PCB are NOT connected, so you must only use the pads on the daughterboard for these offboard connections.

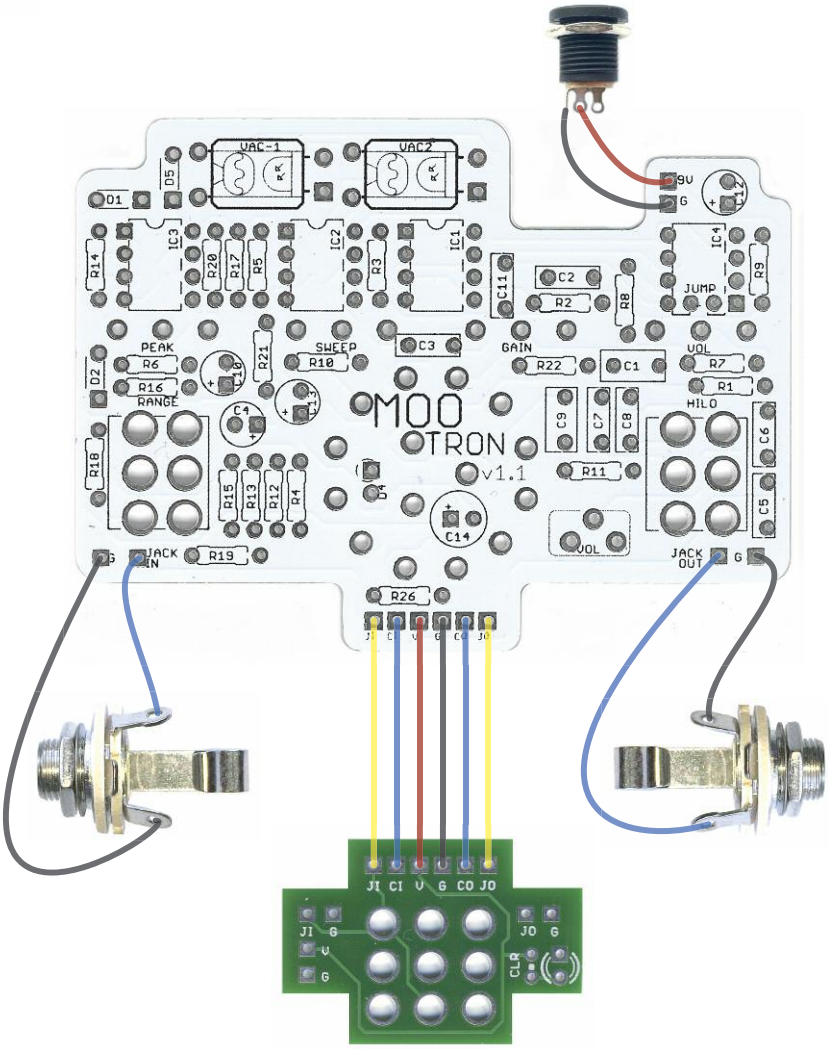

Drilling template

The Gimp

Recommended drill sizes:

Pots	7mm
Jacks	10mm
Footswitch	12mm
DC Socket	12mm
Toggle switches	6mm
Rotary switch	10mm

Hammond 1590BB

91 x 116 x x 31mm

It's a good idea to drill the holes for the pots 8mm to give yourself some wiggle room unless you're a drill ninja

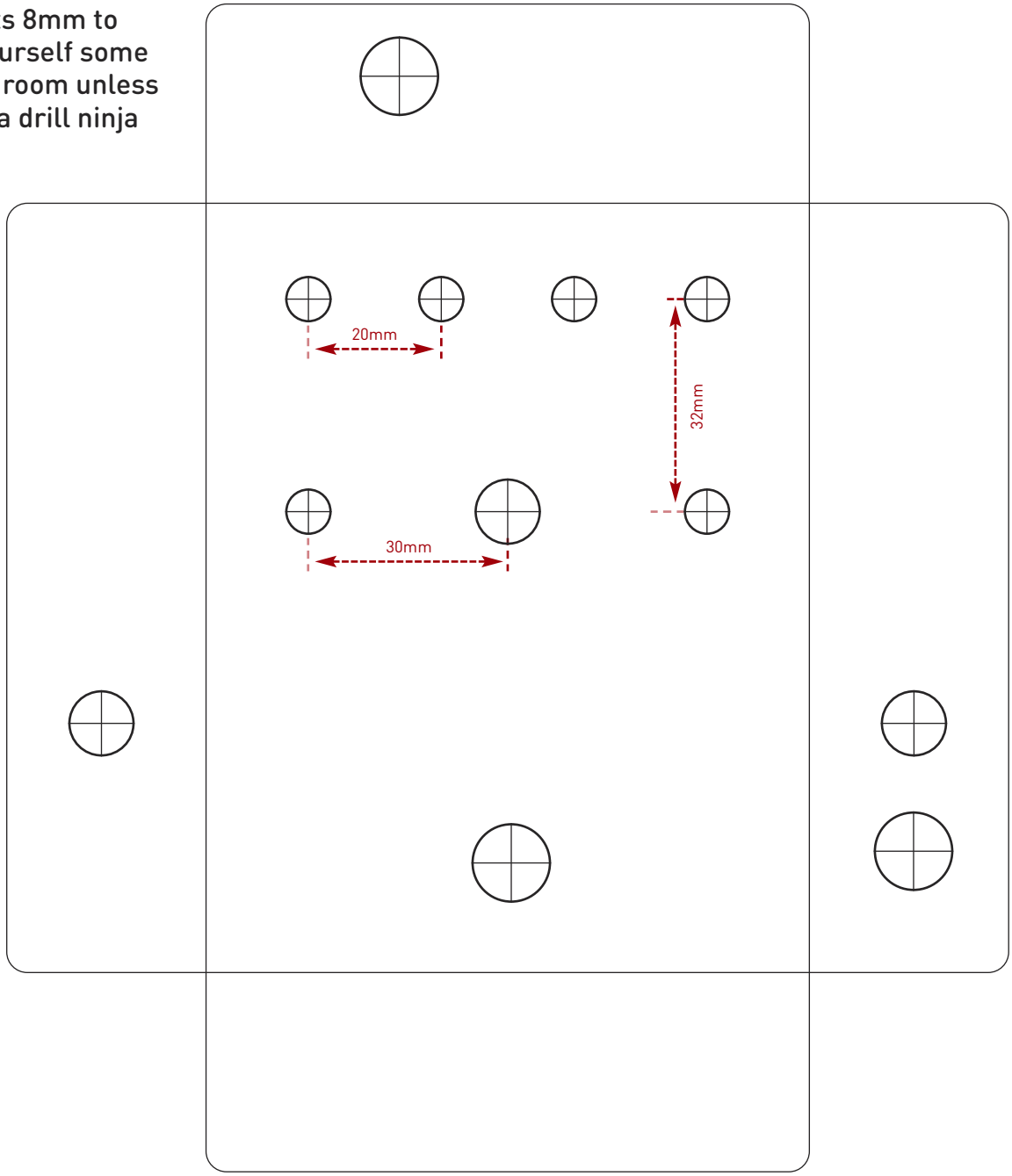

This template is a rough guide only. You should ensure correct marking of your enclosure before drilling. You use this template at your own risk.
Pedal Parts Ltd can accept no responsibility for incorrect drilling of enclosures.

FuzzDog.co.uk