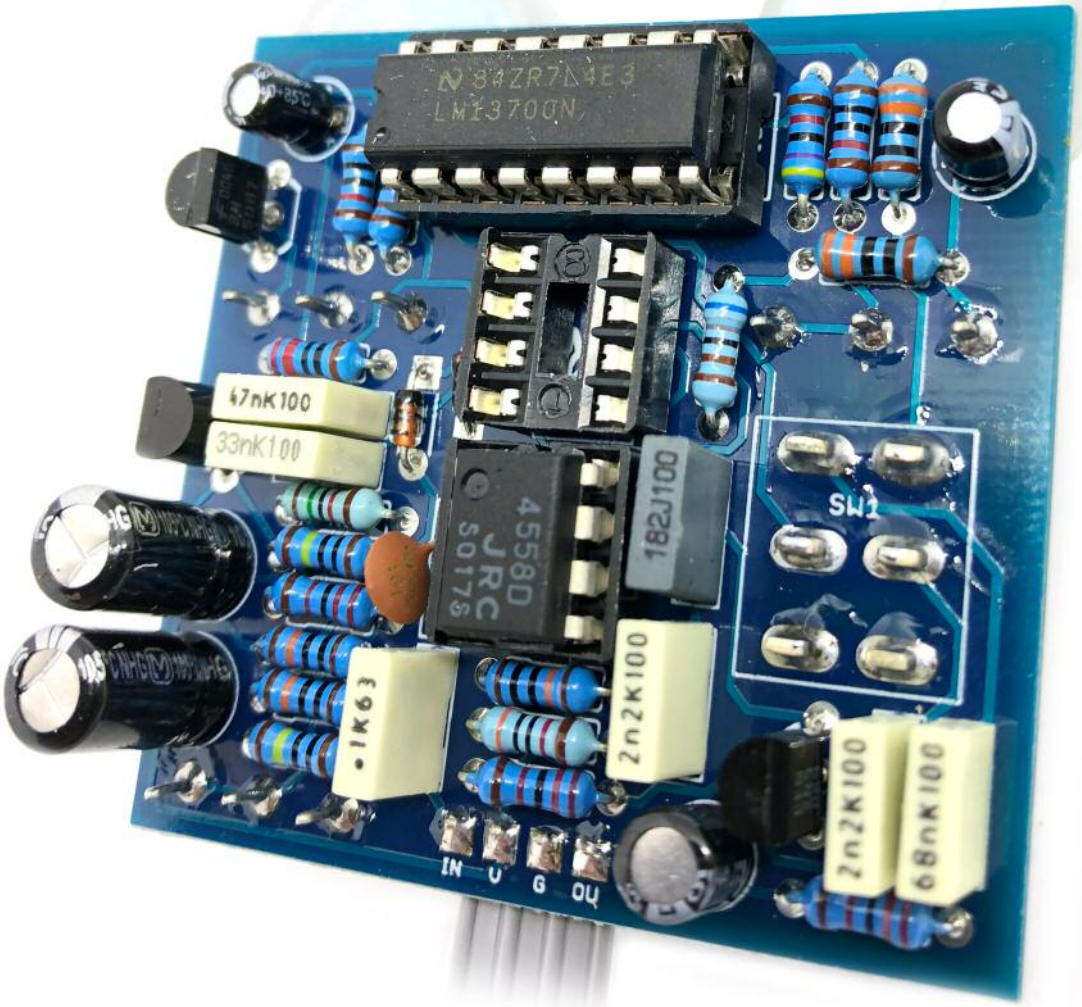

Micro V Filter

Funky Whacka Whacka Envelope Filter Fun

Before you dig in, ensure you download and read the **General Build Guide**.

It contains all the information you need for a successful outcome.

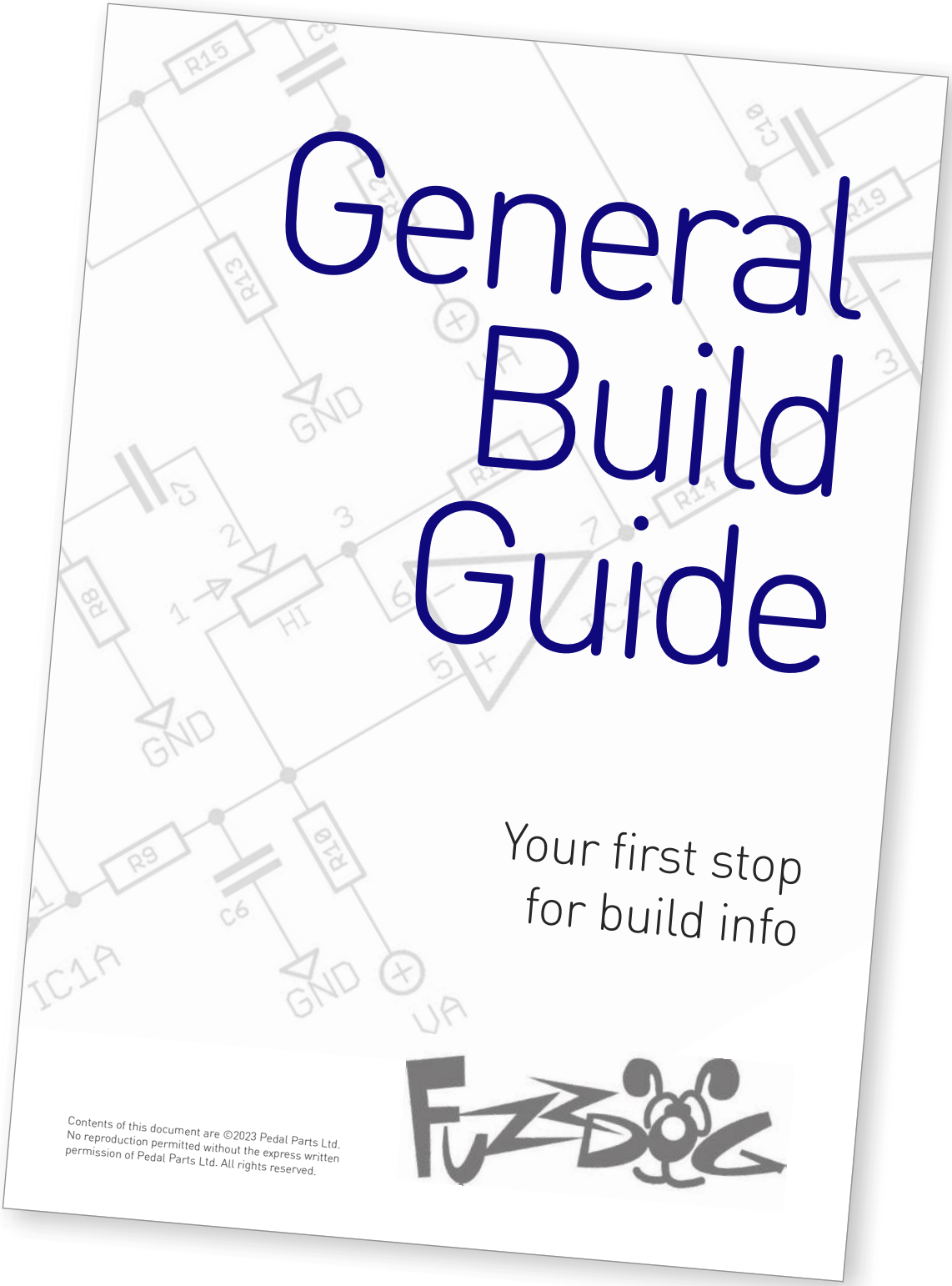

Schematic + BOM

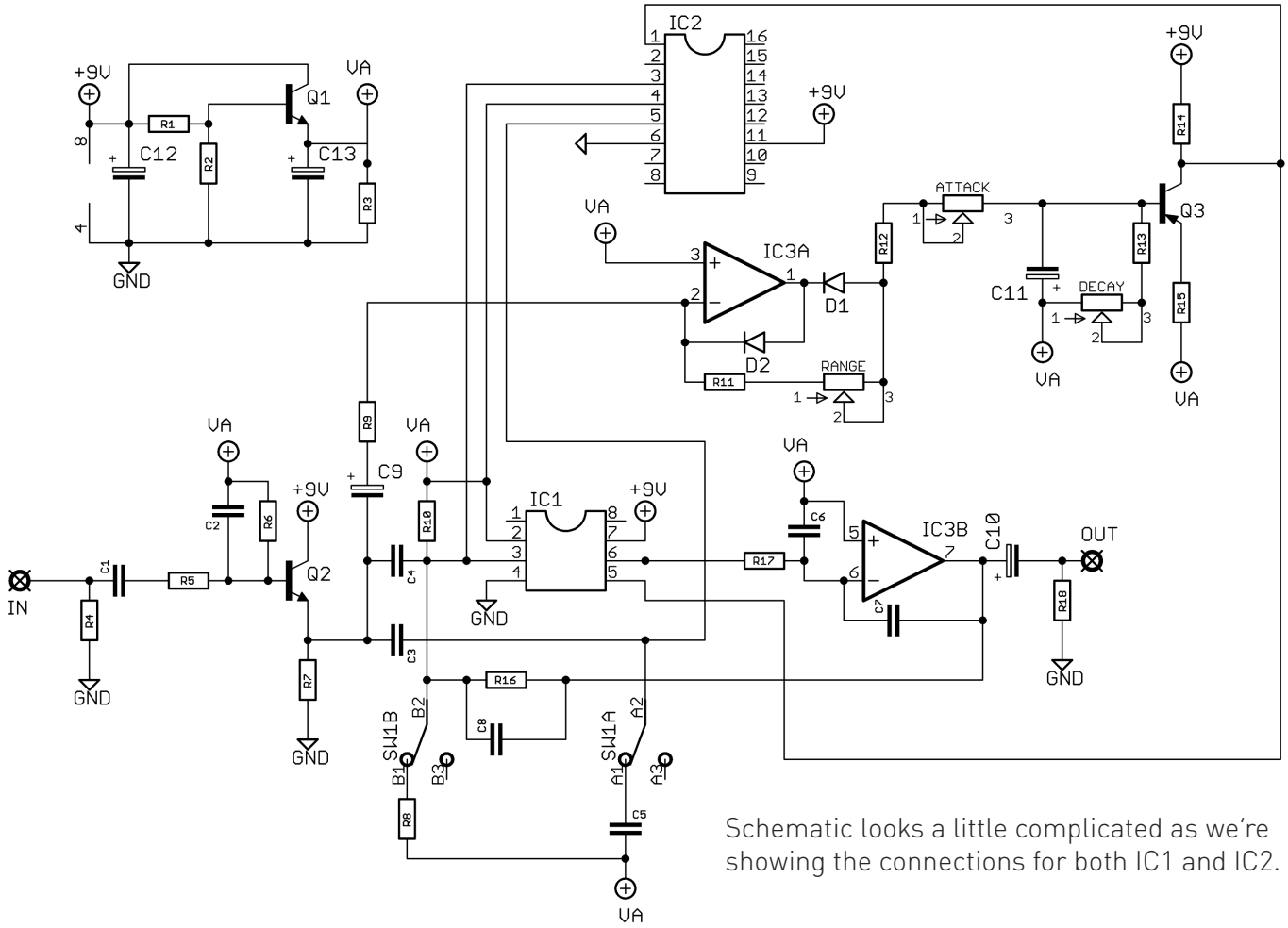

Schematic looks a little complicated as we're showing the connections for both IC1 and IC2.

R1	22K
R2	33K
R3	100K
R4	1M
R5	100K
R6	100K
R7	10K
R8	330R
R9	15K
R10	330R
R11	22K
R12	220R
R13	10K
R14	1M
R15	4K7
R16	6K8
R17	47K
R18	22K

C1	100n
C2	100p
C3	33n
C4	47n
C5	68n
C6	2n2
C7	1n8
C8	2n2
C9	4u7 elec
C10	10u elec
C11	4u7 elec
C12	100u elec
C13	100u elec

Q1-2	2N5089
Q3	2N5087
IC1	CA3080*
IC2	LM13700*
IC3	4558
D1-2	1N4148
RANGE	1MB
ATTACK	2KB
DECAY	100KB
SW1	DPDT ON-ON

*Use EITHER IC1 or IC2, not both.

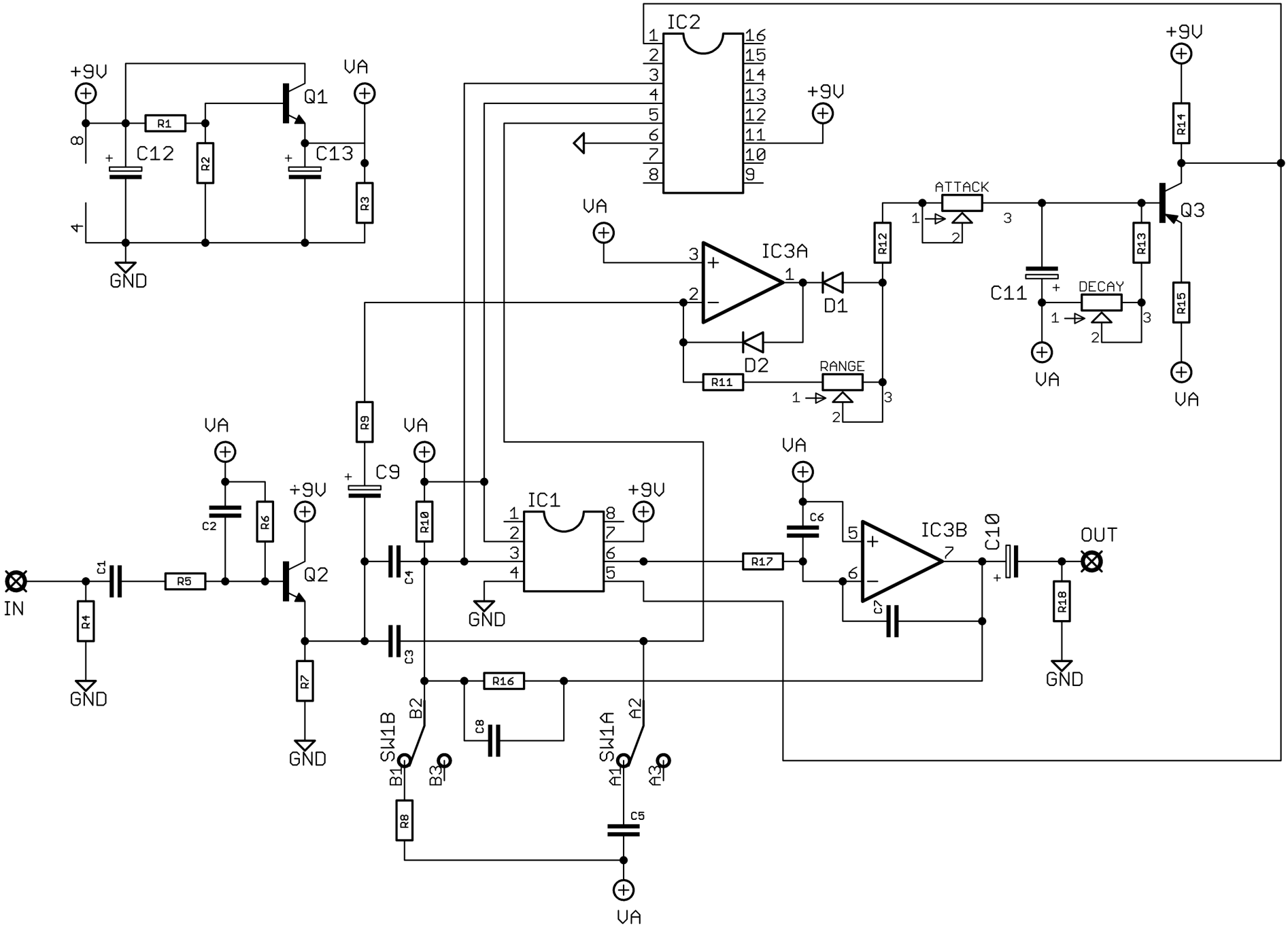
IC2
+9V
VA
Q1
R1
R2
R3
C12
C13
GND
IC3A
D1
D2
R11
R12
RANGE
ATTACK
DECAY
C11
R13
R14
R15
Q3
IC1
R9
C9
R10
C4
C3
R16
C8
SW1B
SW1A
B1
B2
B3
A1
A2
A3
R8
C5
IN
C1
R4
R5
C2
R6
Q2
R7
C6
IC3B
C7
R17
C10
OUT
R18

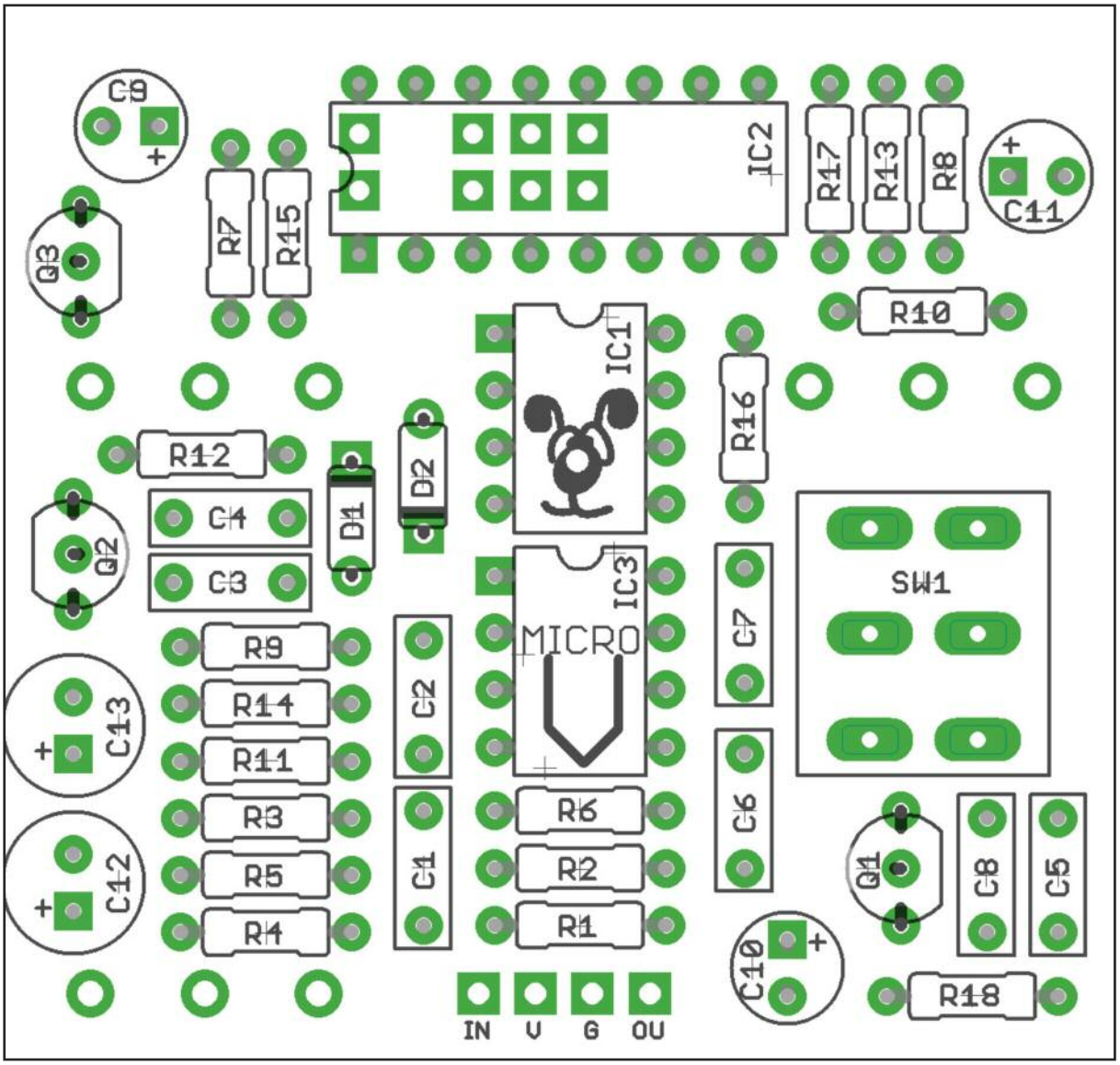

Snap the small metal tag off the pots so they can be mounted flush in the box.

You should solder all other board-mounted components before you solder the pots.

Once they're in place you'll have no access to much of the board.

There are extra pads beneath IC2. See next page.

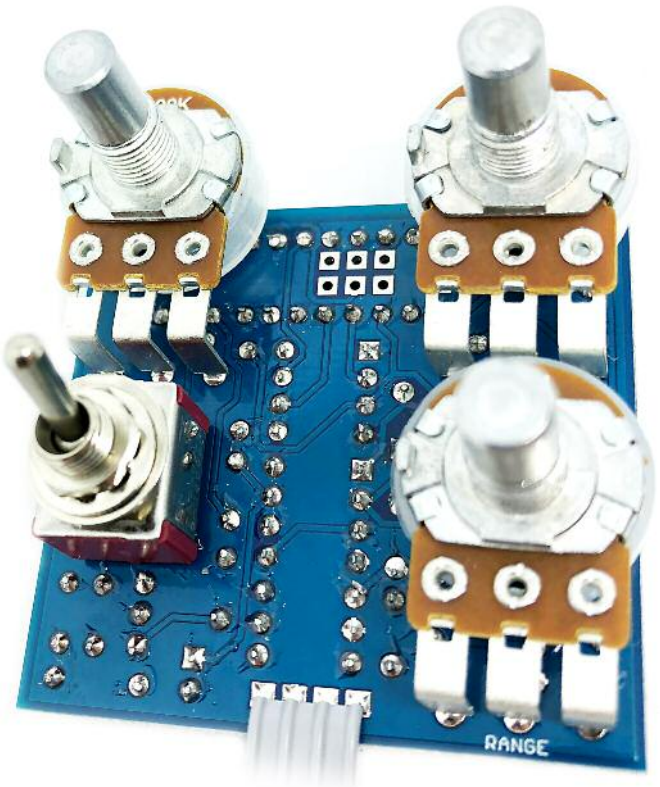

Why IC1 and IC2, and what are those extra pads?

The CA3080 OTA (Operational Transductance Amplifier) is now obsolete, but we've included a space to accommodate it if you have one handy. This would go in the IC1 spot.

The LM13700 is a dual OTA, which is basically two CA3080 in one package. This is still readily available so we supply this with the kit. This goes into the IC2 spot.

Now, since we have two OTA in one package, we can use both in the circuit. Splitting your signal across both OTA circuits effectively halves the signal level going into each. Don't worry, they're combined at the output so will be the same level as you'd get without splitting. Why would you do this? Decreasing the signal level reduces the chance of harmonic distortion being produced in the OTAs. In real world tests we didn't hear any difference whether we used one or both of the OTAs, but some spectrum analysis may show otherwise.

To double-up the OTA, simply connect the extra pads as shown below. You'll have to keep your solder joints tight so you're not interfering with the IC socket when you place it.

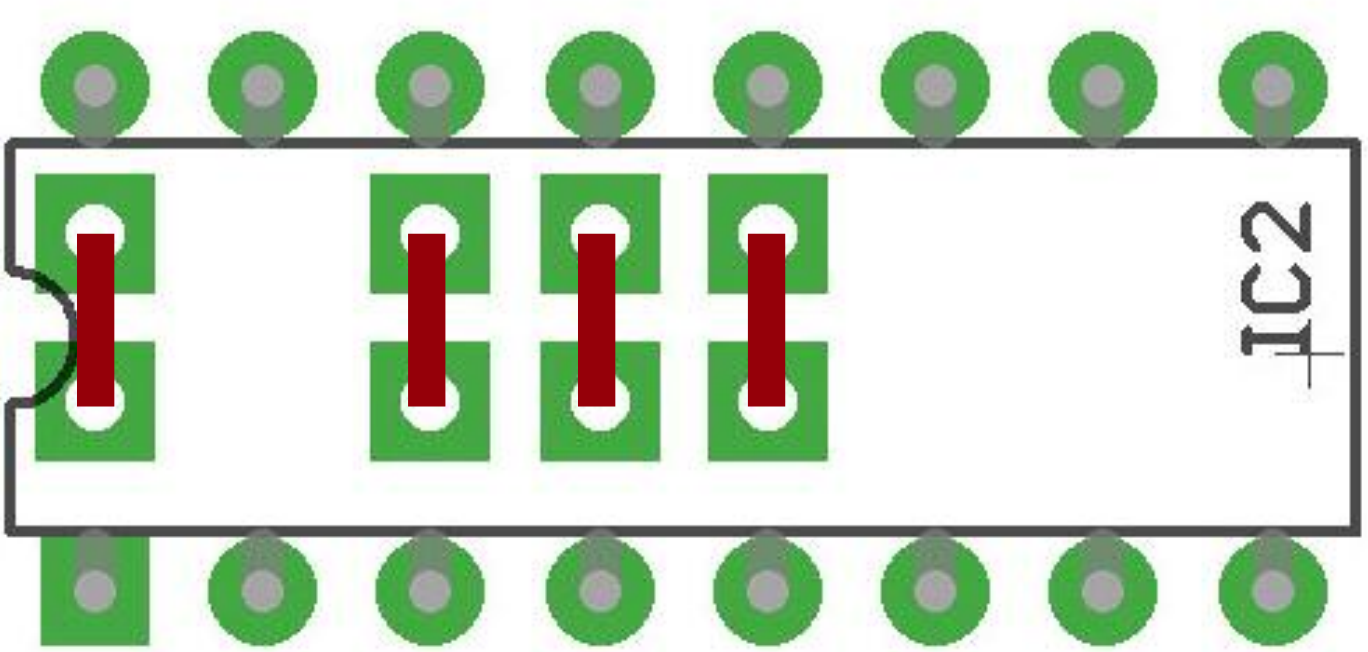

Drilling template

Hammond 1590B - 60 x 111 x 31mm

Drill sizes listed are minimum.
It's a good idea to add 1mm to anything mounted on the PCB that'll poke through the front of the enclosure.

Drill sizes:

Pots	7mm
Jacks	10mm
Footswitch	12mm
DC Socket	12mm
Toggle switches	6mm
Rotary switches	10mm

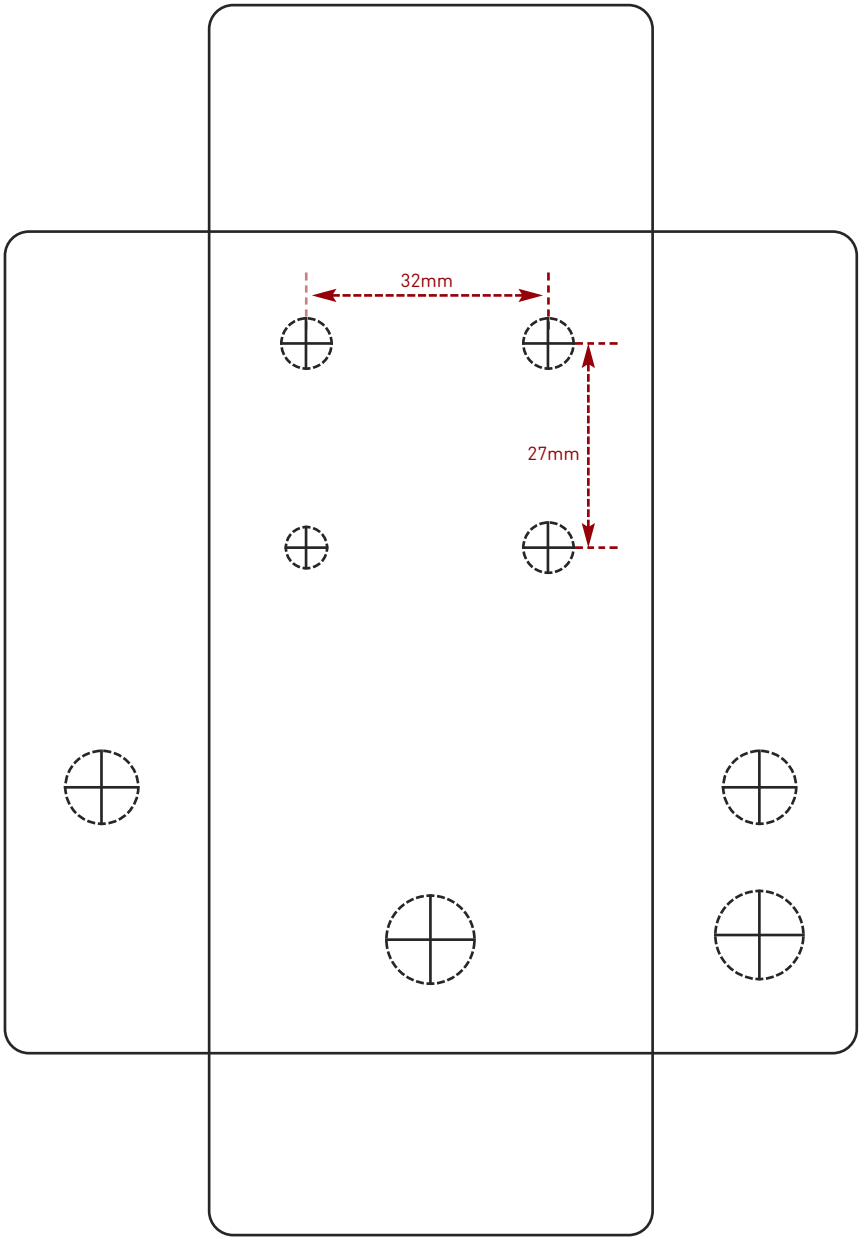

This template is a rough guide only. You should ensure correct marking of your enclosure before drilling. You use this template at your own risk.
Pedal Parts Ltd can accept no responsibility for incorrect drilling of enclosures.

FuzzDog.co.uk