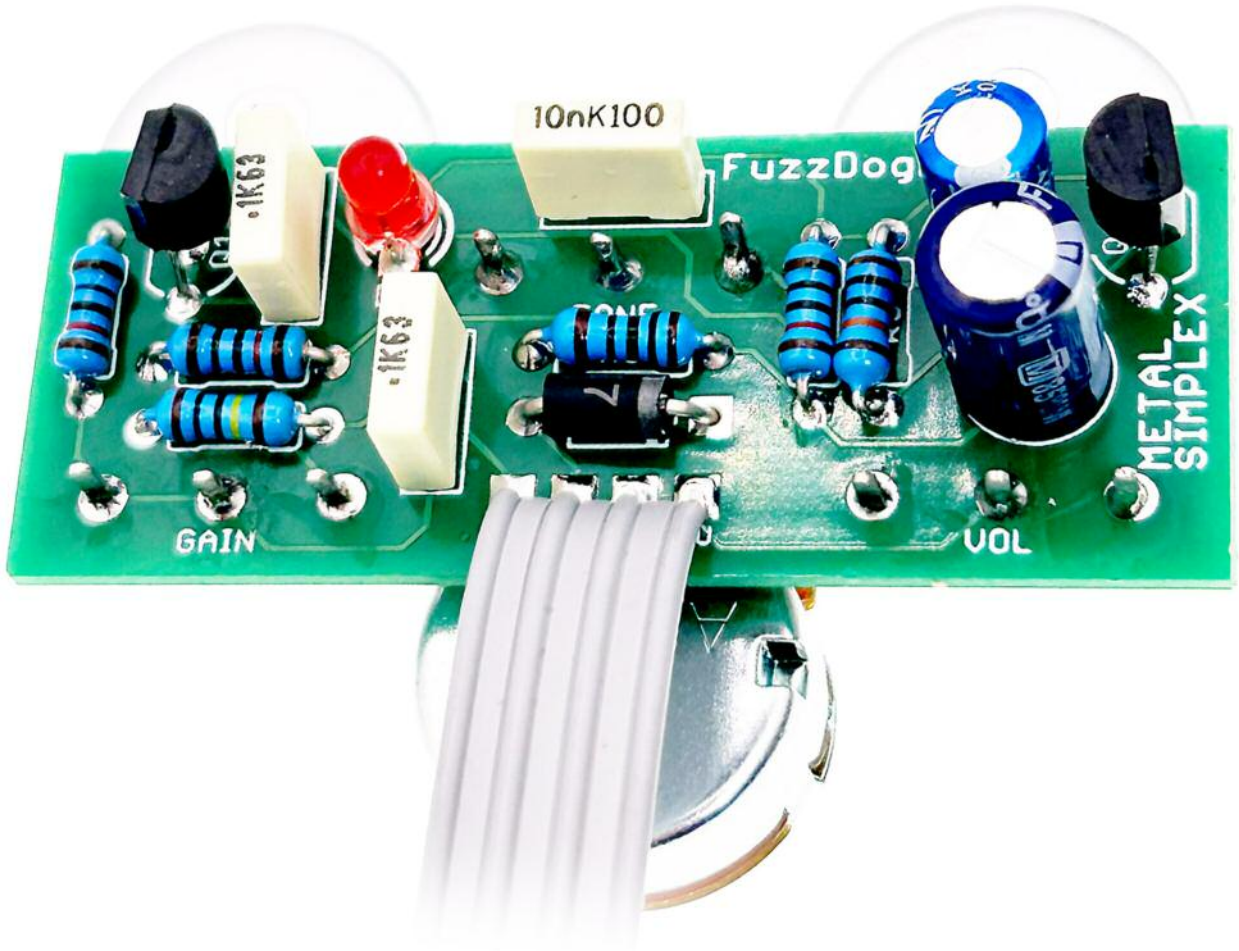

Metal Simplex

Super simple silicon fuzz - a DIY staple

Contents of this document are ©2025 Pedal Parts Ltd.
No reproduction permitted without the express written permission of Pedal Parts Ltd. All rights reserved.

Before you dig in, ensure you download and read the **General Build Guide**.

It contains all the information you need for a successful outcome.

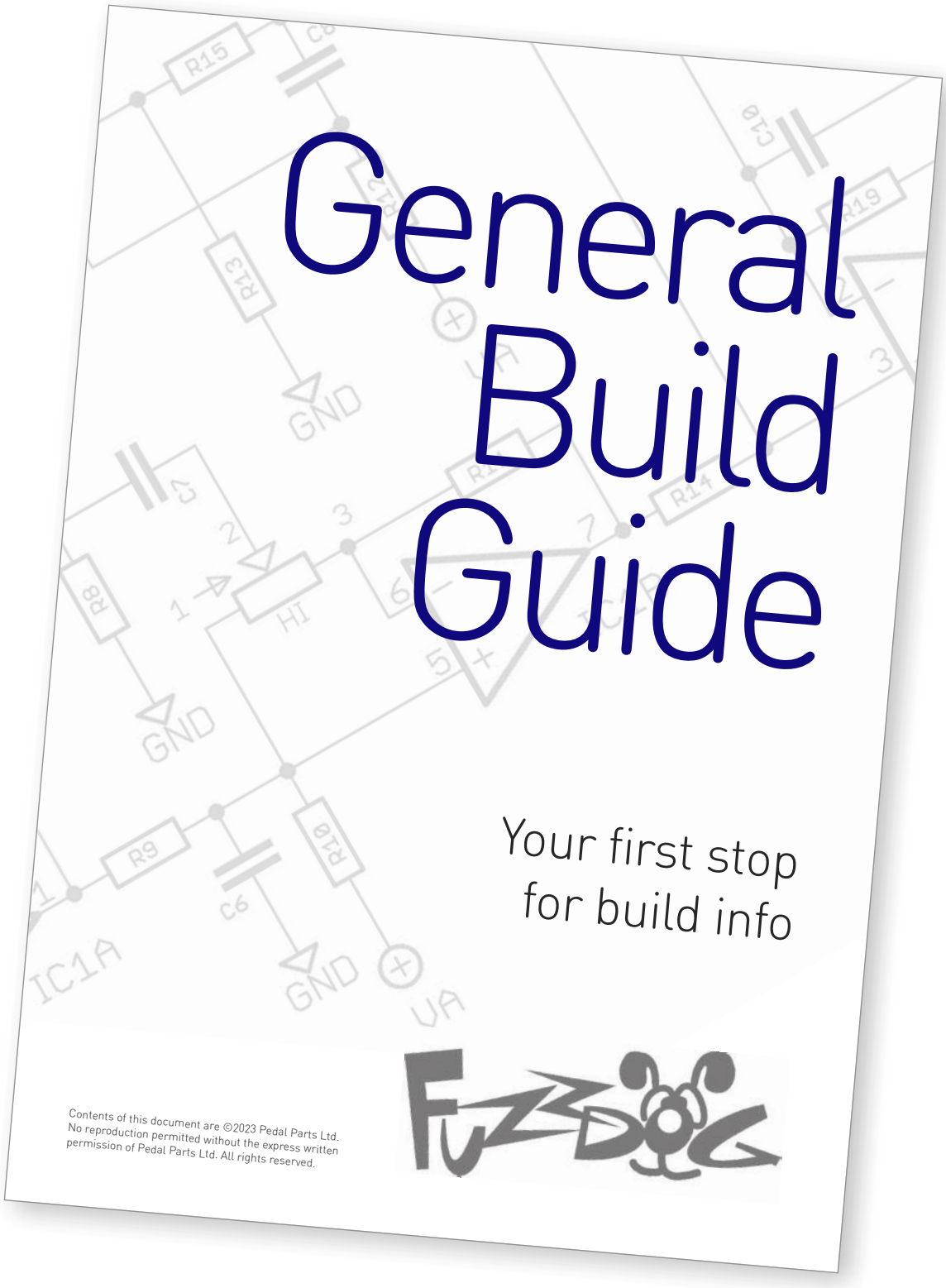

Schematic + BOM

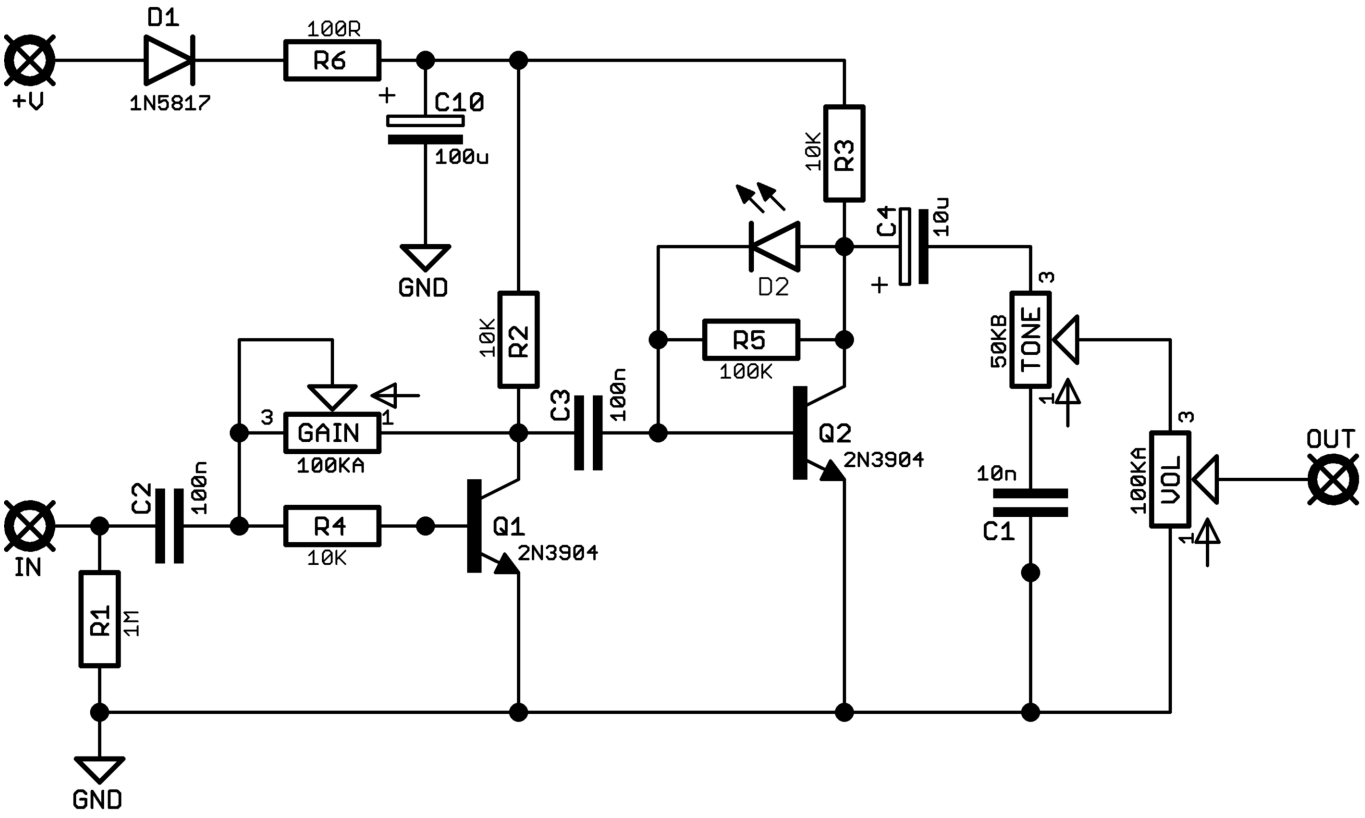

R1	1M
R2	10K
R3	10K
R4	10K
R5	100K
R6	100R
C1	10n
C2	100n
C3	100n
C4	10u elec
C10	100u elec

D1	1N5817
D2	3mm Red LED
Q1	2N3904 <>220hFE*
Q2	2N3904 <>170hFE*
GAIN	100KA
TONE	50KB
VOL	100KA

*The original design calls for these values, but after some swapping out we found it works without such specifics. Feel free to try other usual suspect BJTs, or even some fancy exotics you have kicking around.

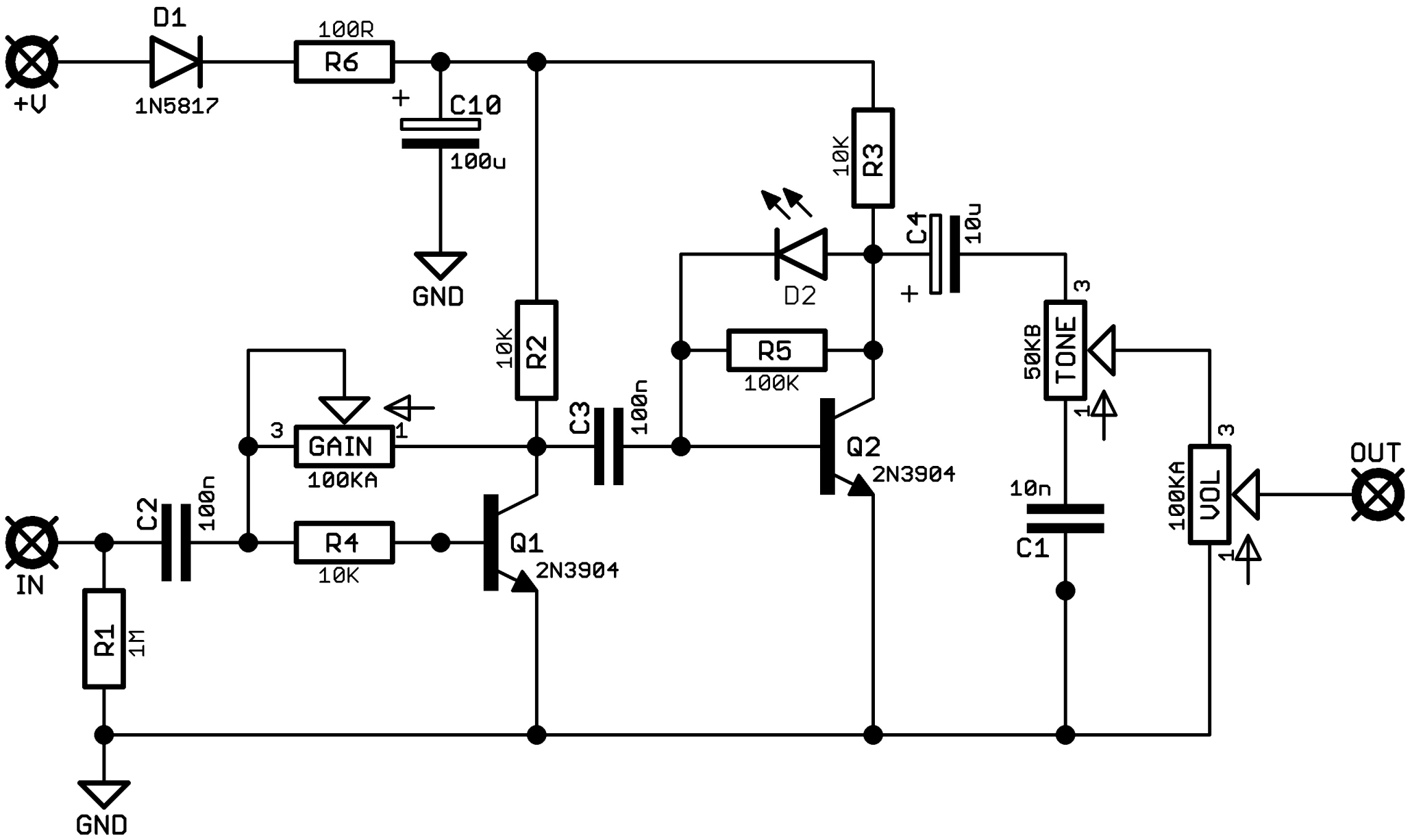

+V
D1
1N5817
100R
R6
C10
100u
GND
10K
R3
C4
10u
D2
R5
100K
10K
R2
C3
100n
GAIN
100KA
3
1
Q2
2N3904
50KB
TONE
10n
C1
100KA
VOL
OUT
IN
C2
100n
R4
10K
Q1
2N3904
R1
1M
GND

PCB layout ©2025 Pedal Parts Ltd.

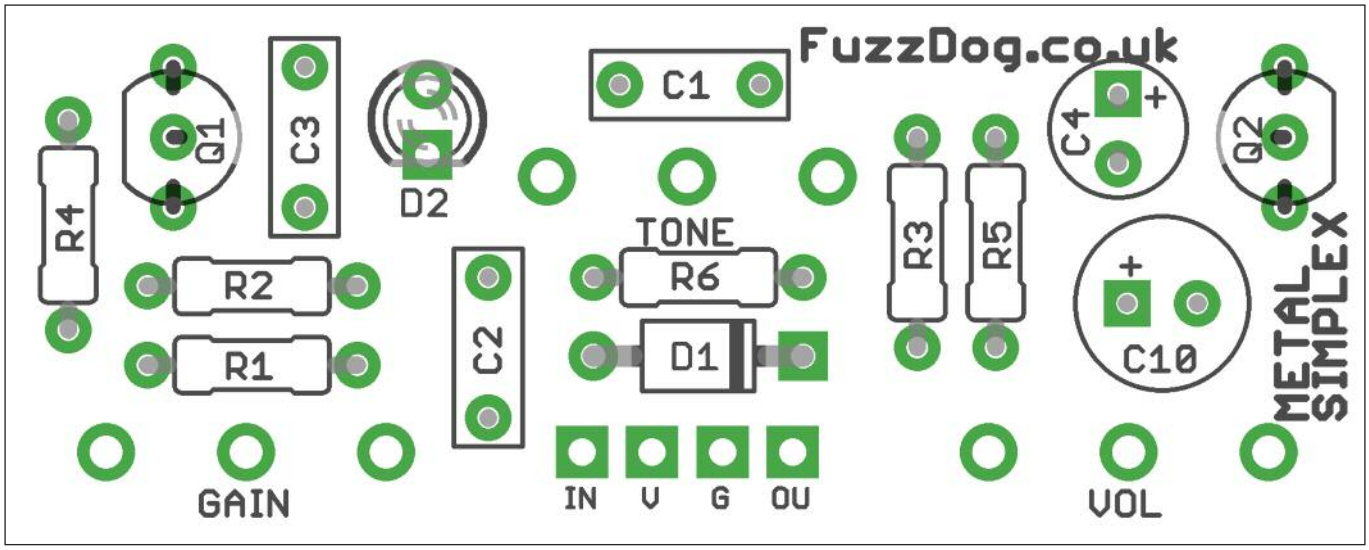

Snap the small metal tag off the pots so they can be mounted flush in the box.

You should solder all other board-mounted components before you solder the pots.

Once they're in place you'll have no access to much of the board.

RIBBON CABLE

We recommed you put this on the top side of the PCB, as per the cover image, so it isn't in the way of the Tone pot.

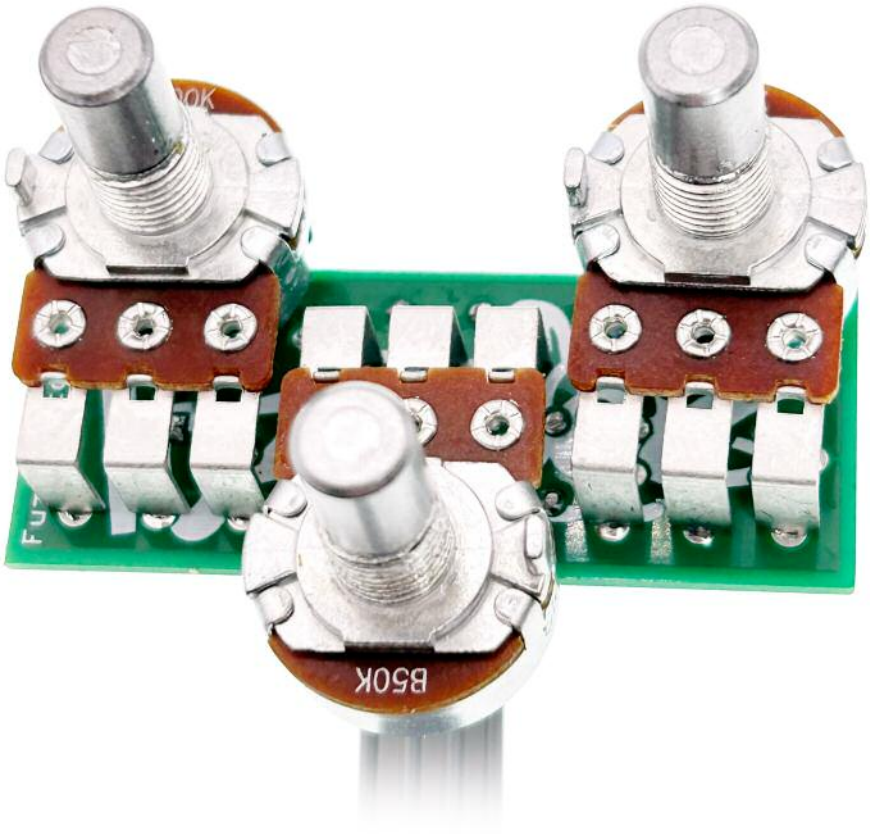

Drilling template

Hammond 1590B - 60 x 111 x 31mm

Drill sizes listed are minimum.
It's a good idea to add 1mm to anything mounted on the PCB that'll poke through the front of the enclosure.

Drill sizes:

Pots	7mm
Jacks	10mm
Footswitch	12mm
DC Socket	12mm

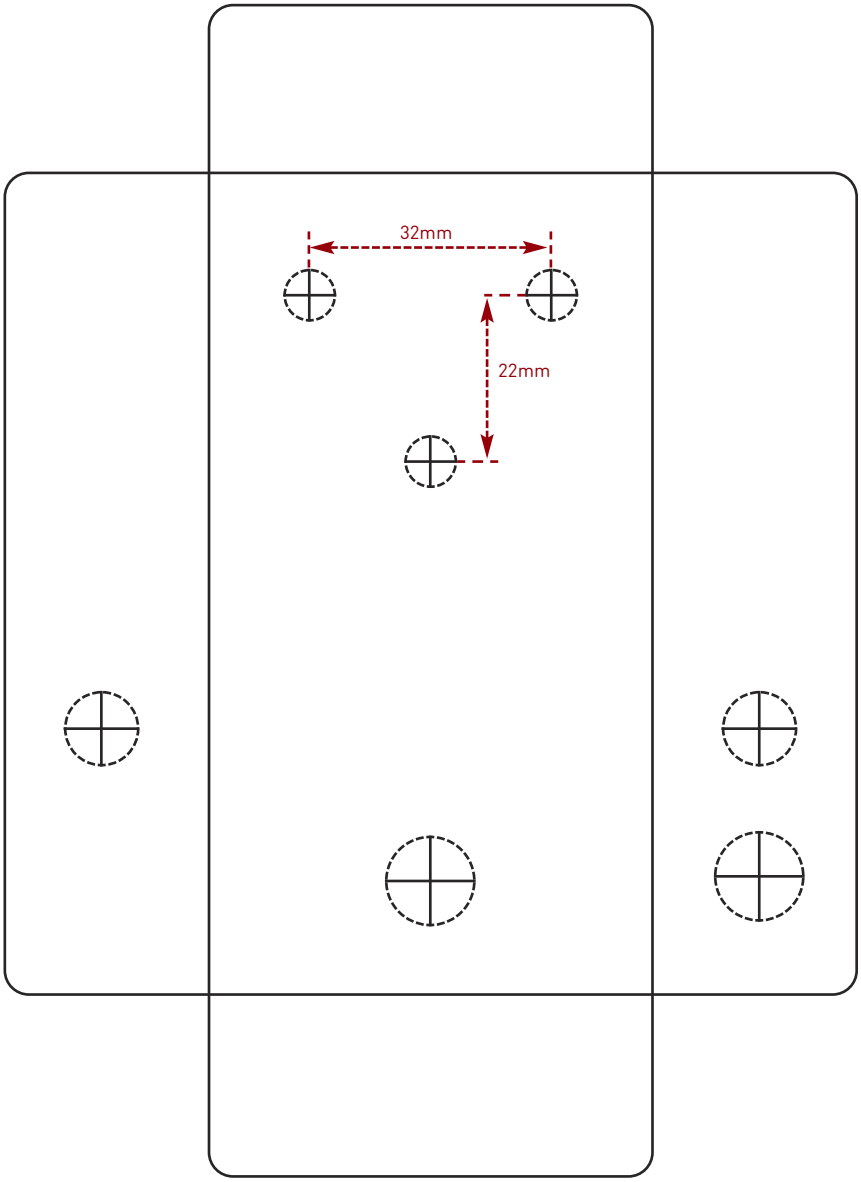

This template is a rough guide only. You should ensure correct marking of your enclosure before drilling. You use this template at your own risk.
Pedal Parts Ltd can accept no responsibility for incorrect drilling of enclosures.

FuzzDog.co.uk