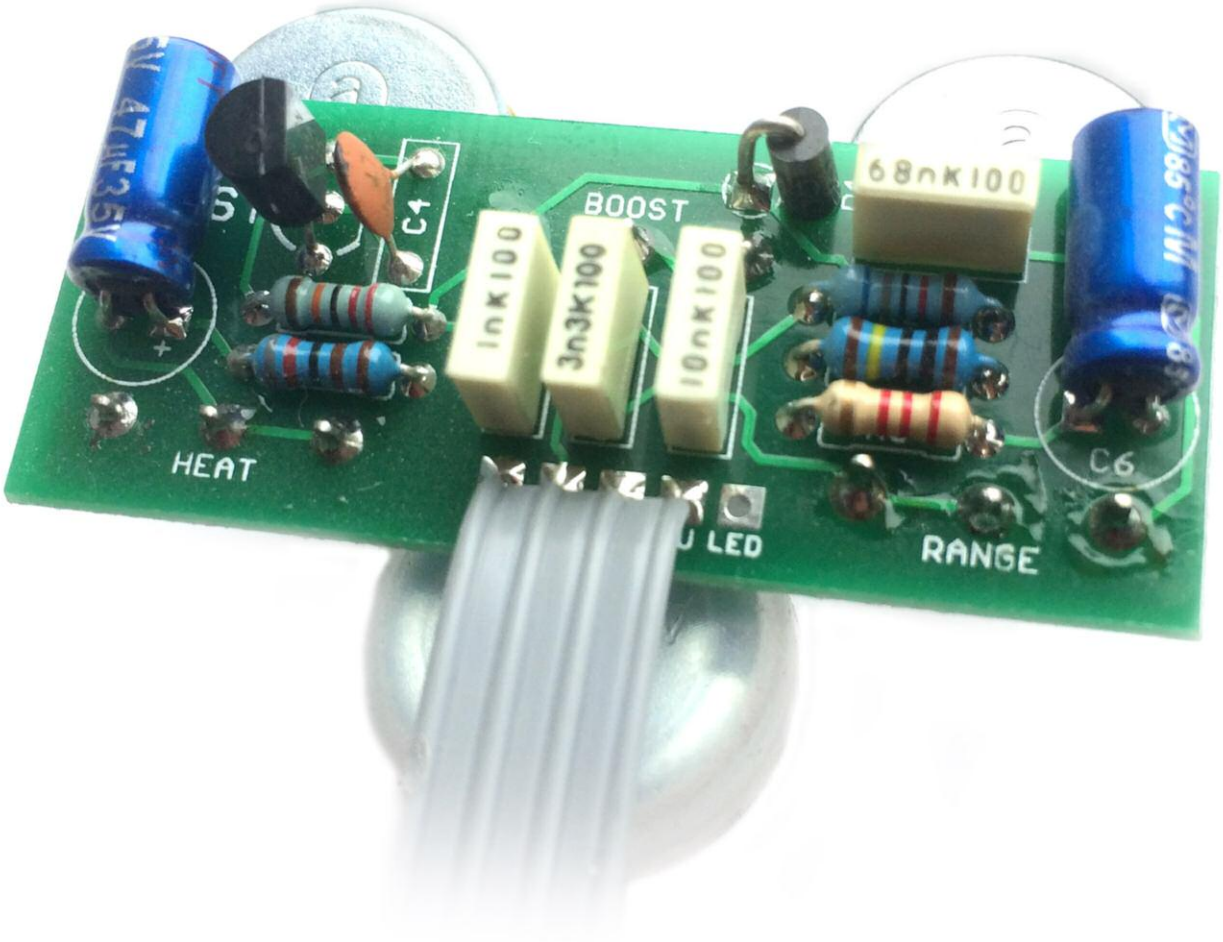

Hot Snake Boost

Red Hot Treble Boost
...Careful now

Schematic + BOM

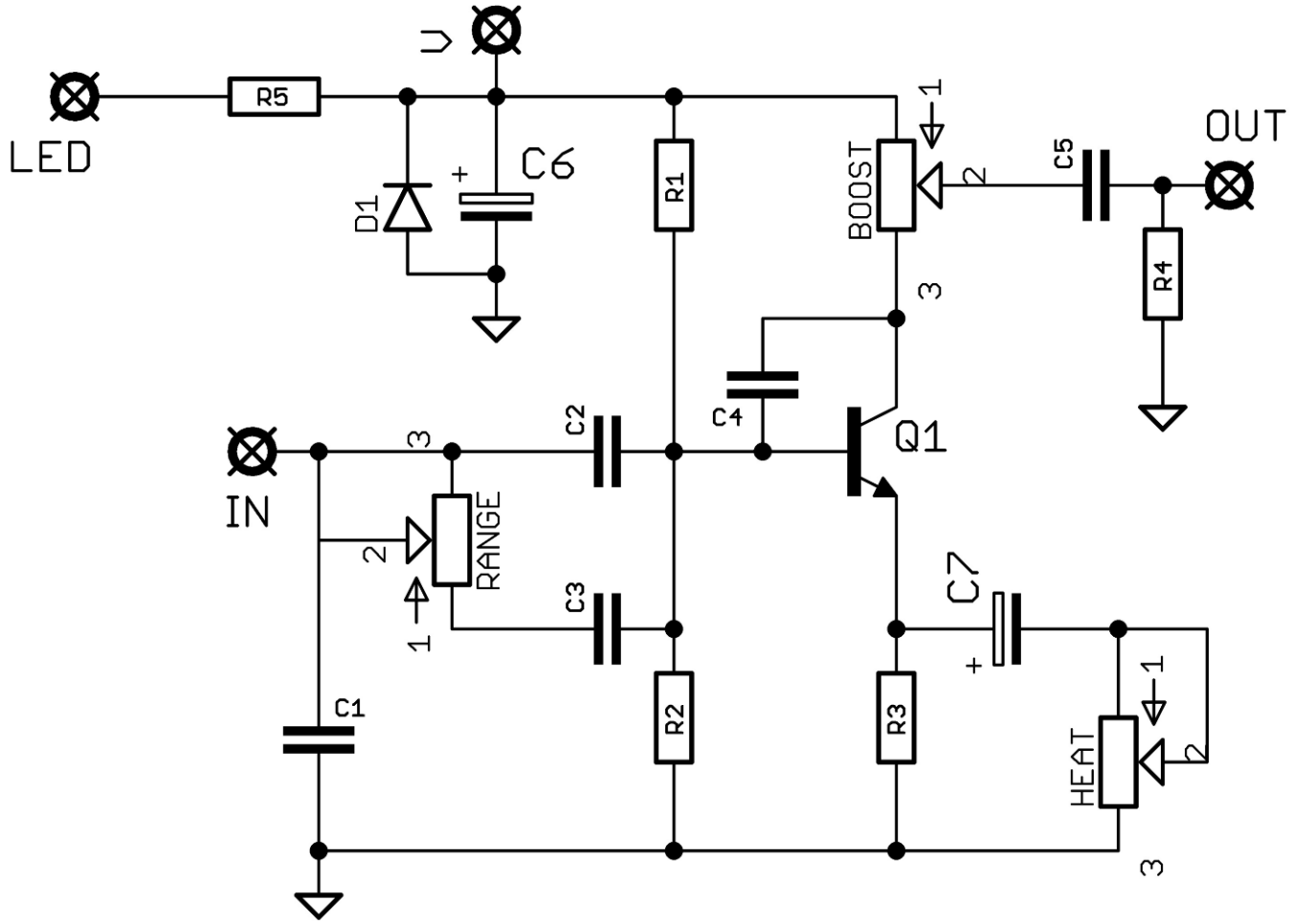

R1	220K	C1	1n	D1	1N4001
R2	68K	C2	3n3		
R3	8K2	C3	68n	Q1	2N2222**
R4	1M*	C4	47p		
R5	2K2 (CLR)	C5	10n	BOOST	10KB
		C6	47u elec	HEAT	1KB
		C7	47u elec	RANGE	500KA

*R4 is an optional anti-pop resistor.

** See notes overleaf regarding pinout/orientation before placing.

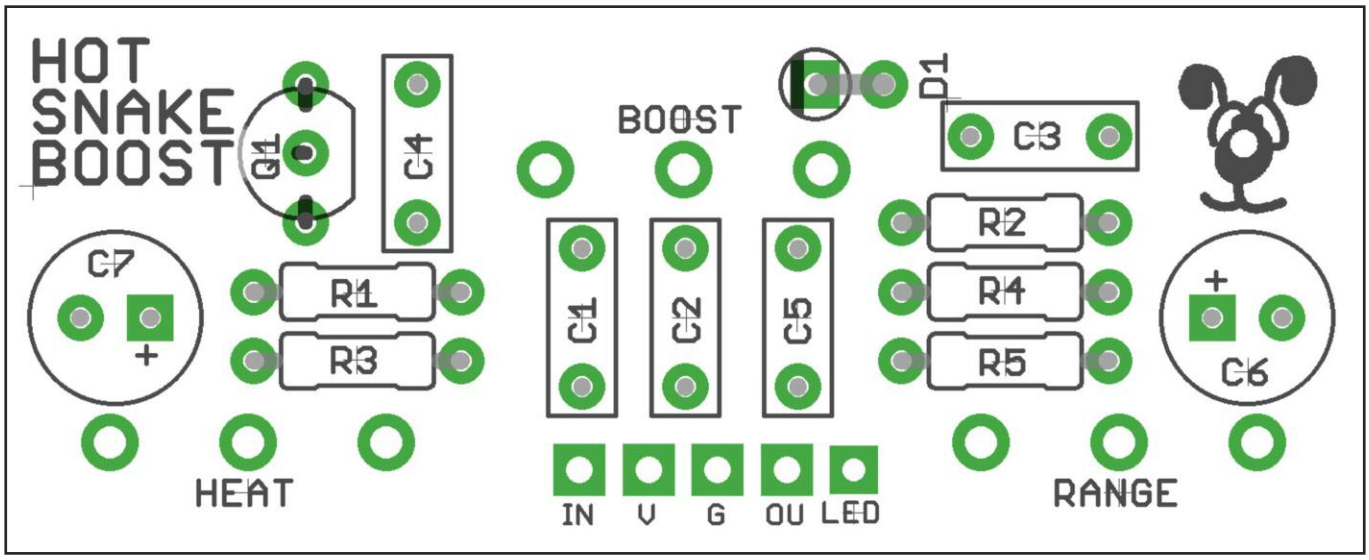

The power and signal pads on the PCB conform to the FuzzDog Direct Connection format, so can be paired with the appropriate daughterboard for quick and easy offboard wiring. Check the separate daughterboard document for details.

Be very careful when soldering the diode and transistor. They're very sensitive to heat. You should use some kind of heat sink (crocodile clip or reverse action tweezers) on each leg as you solder them. Keep exposure to heat to a minimum (under 2 seconds).

Snap the small metal tag off the pots so they can be mounted flush in the box.

Positive (anode) legs of the electrolytic caps go to the square pads.

C6 and C7 can be laid flat to the PCB as shown on the cover image. This will give more clearance in your enclosure.

Negative (cathode) legs of the diodes go to the square pads.

The controls on this circuit are very interactive. A little tweak here may require another tweak there.

TRANSISTOR PINOUTS

Manufacturers can be very unhelpful sometimes. Different versions of 2N2222 may have different pinouts. Check your datasheet if sourcing your own parts.

If you're building a FuzzDog kit, your transistors will be one of the following:

PN2222 - these should be mounted as per the component silkscreen on the PCB, i.e. flat side of Q1 to bottom of board.

P2N2222 - these have the opposite pinout, and should be reversed.

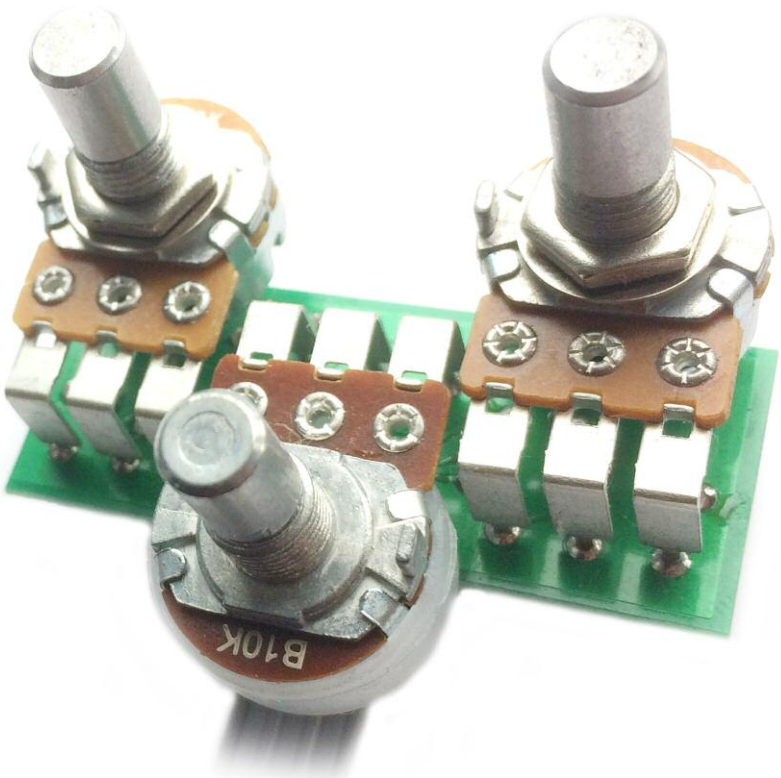

Test the board!

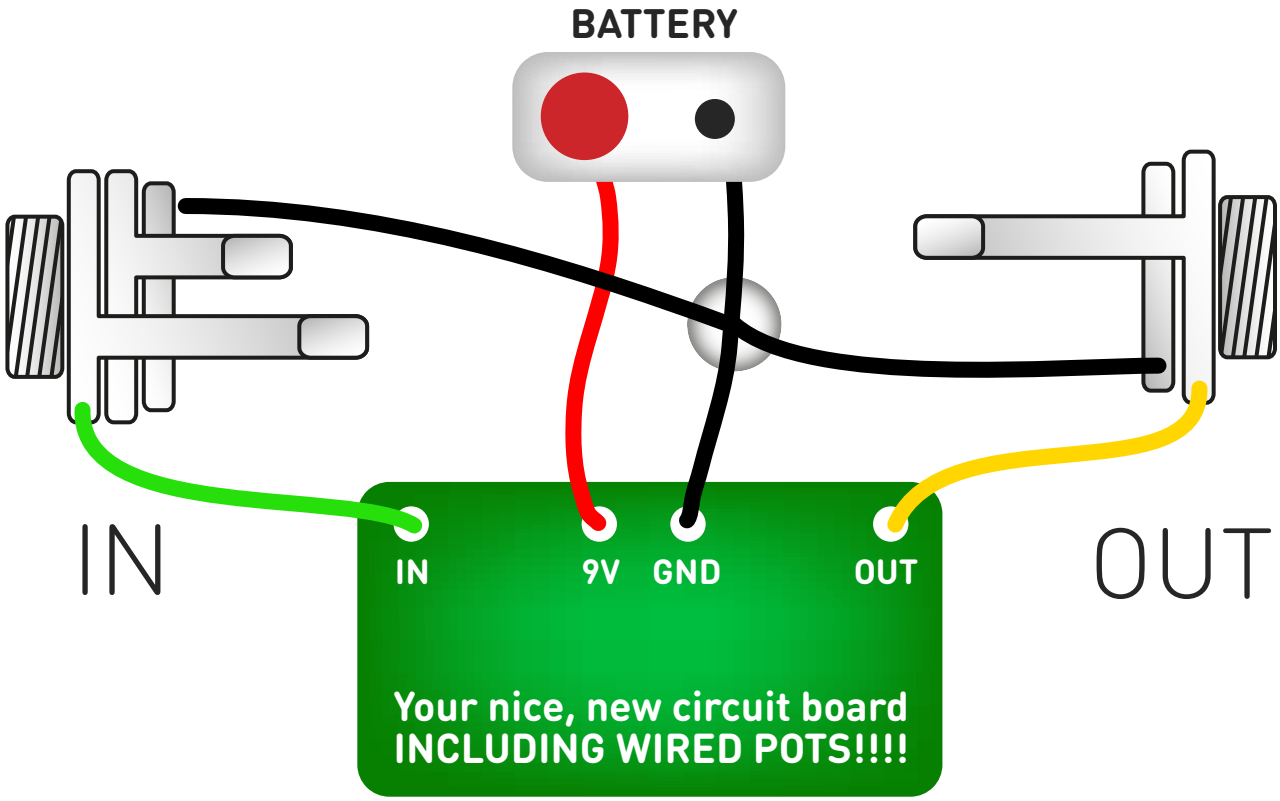

UNDER NO CIRCUMSTANCES will troubleshooting help be offered if you have skipped this stage. No exceptions.

Once you've finished the circuit it makes sense to test is before starting on the switch and LED wiring. It'll cut down troubleshooting time in the long run. If the circuit works at this stage, but it doesn't once you wire up the switch - guess what? You've probably made a mistake with the switch.

Solder some nice, long lengths of wire to the board connections for 9V, GND, IN and OUT. Connect IN and OUT to the jacks as shown. Connect all the GNDs together (twist them up and add a small amount of solder to tack it). Connect the battery + lead to the 9V wire, same method. Plug in. Go!

If it works, crack on and do your switch wiring. If not... aw man. At least you know the problem is with the circuit. Find out why, get it working, THEN worry about the switch etc.

Wire it up (if using a daughterboard please refer to the relevant document)

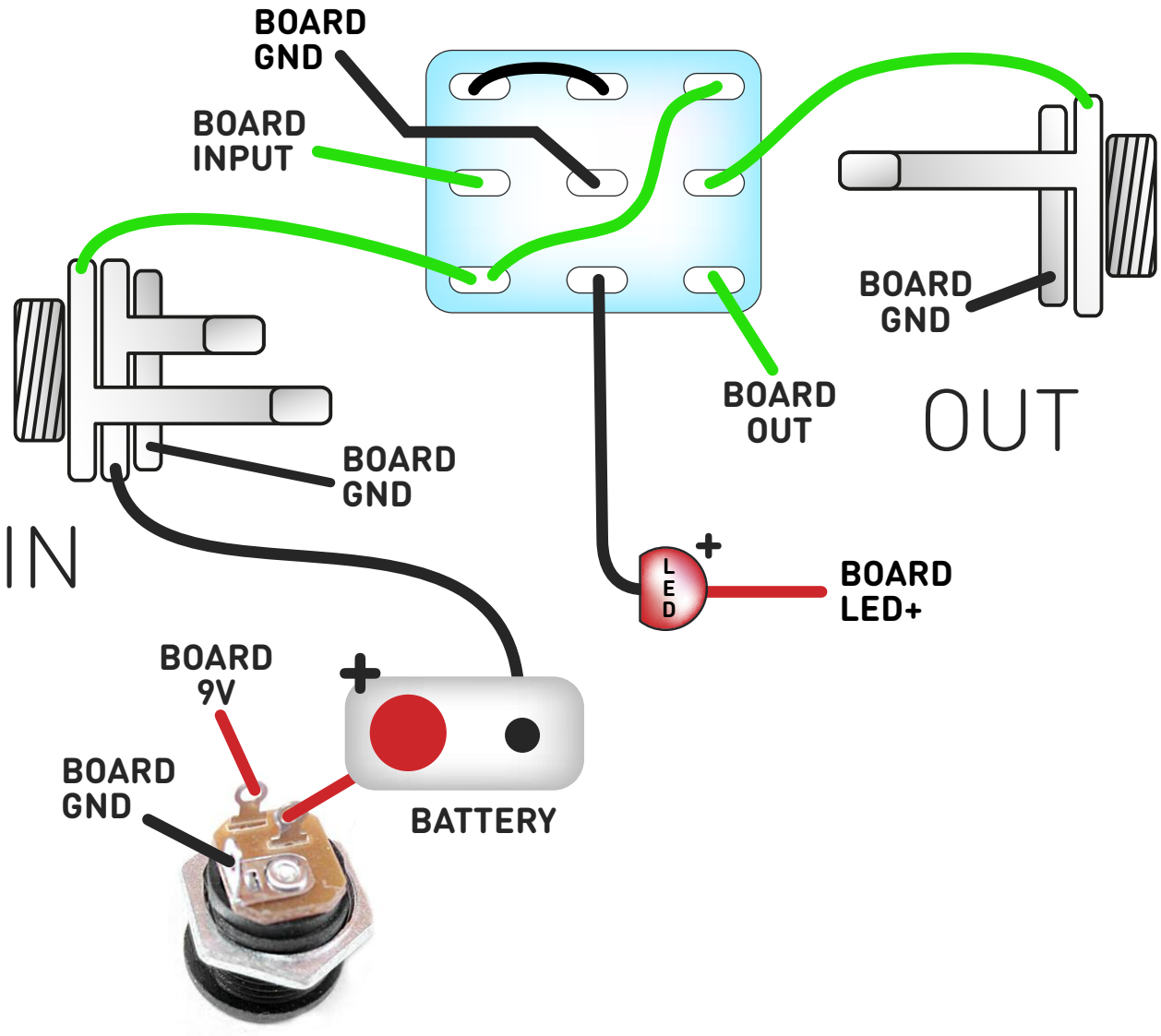

Wiring shown above will disconnect the battery when you remove the jack plug from the input, and also when a DC plug is inserted.

The Board GND connections don't all have to directly attach to the board. You can run a couple of wires from the DC connector, one to the board, another to the IN jack, then daisy chain that over to the OUT jack.

It doesn't matter how they all connect, as long as they do.

This circuit is standard, Negative GND. Your power supply should be Tip Negative / Sleeve Positive. That's the same as your standard pedals (Boss etc), and you can safely daisy-chain your supply to this pedal.

Drilling template

Hammond 1590B

60 x 111 x 31mm

Recommended drill sizes:

Pots	7mm
Jacks	10mm
Footswitch	12mm
DC Socket	12mm

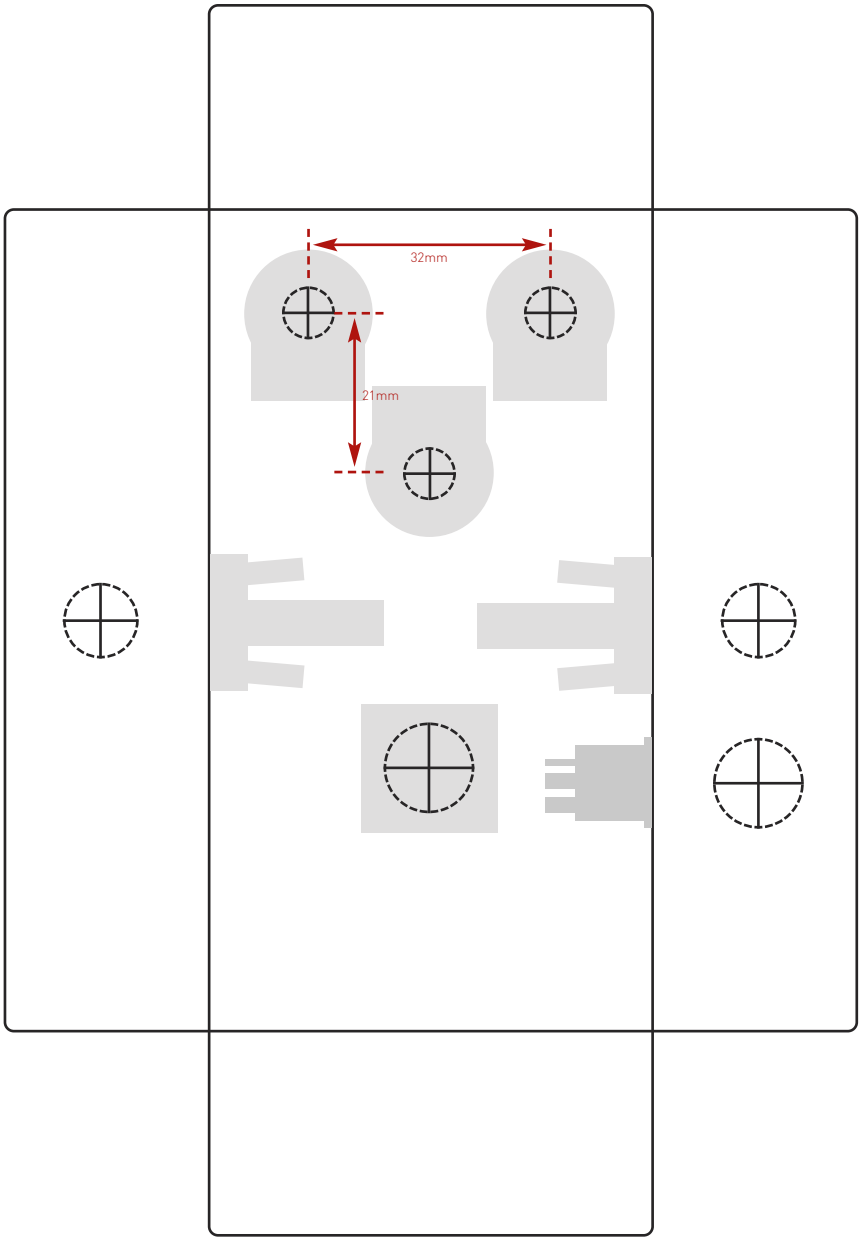

This template is a rough guide only. You should ensure correct marking of your enclosure before drilling. You use this template at your own risk.
Pedal Parts Ltd can accept no responsibility for incorrect drilling of enclosures.

FuzzDog.co.uk