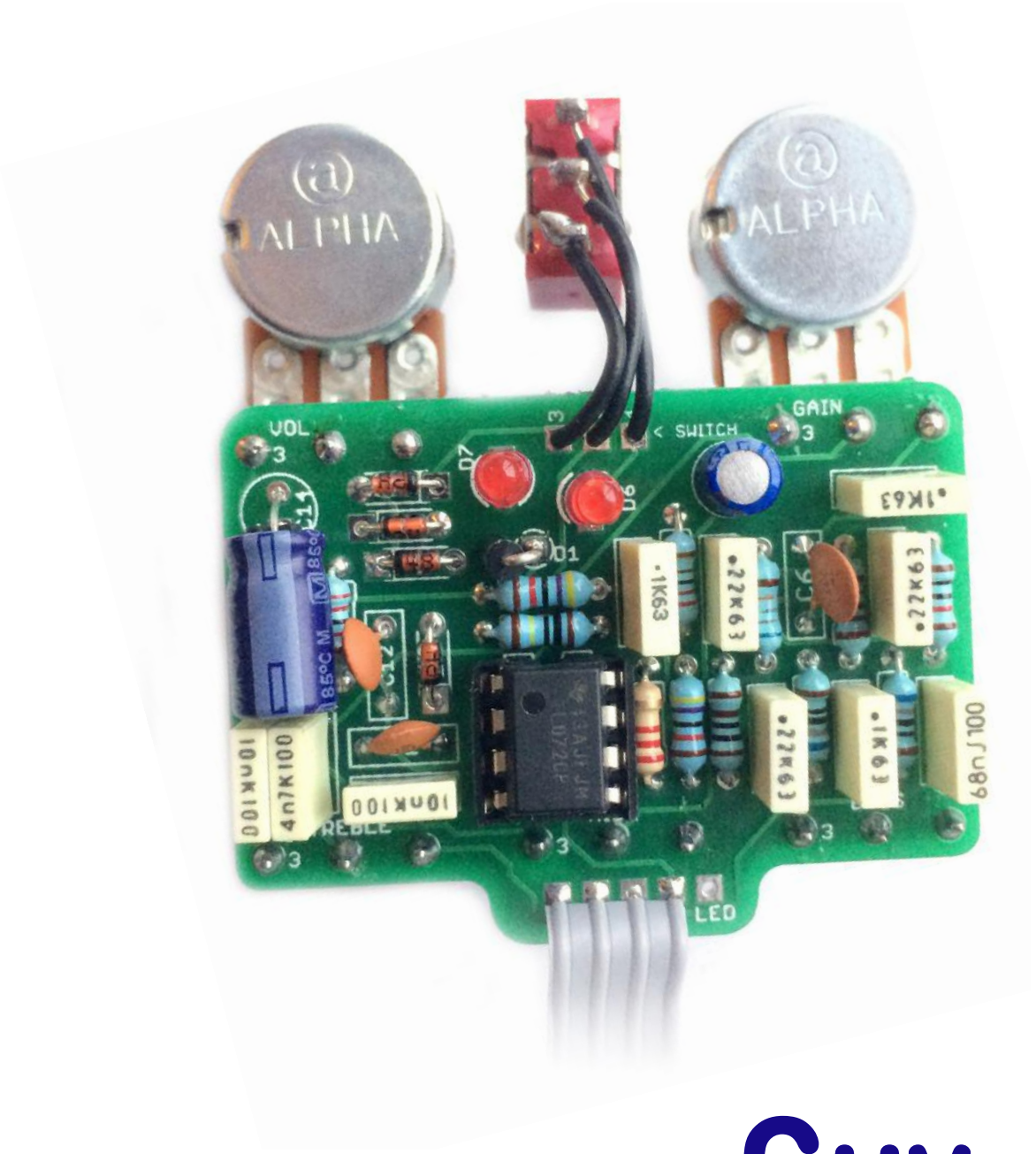

Guv

Marshall-esque distortion with versatile tone controls

Before you dig in, ensure you download and read the **General Build Guide**.

It contains all the information you need for a successful outcome.

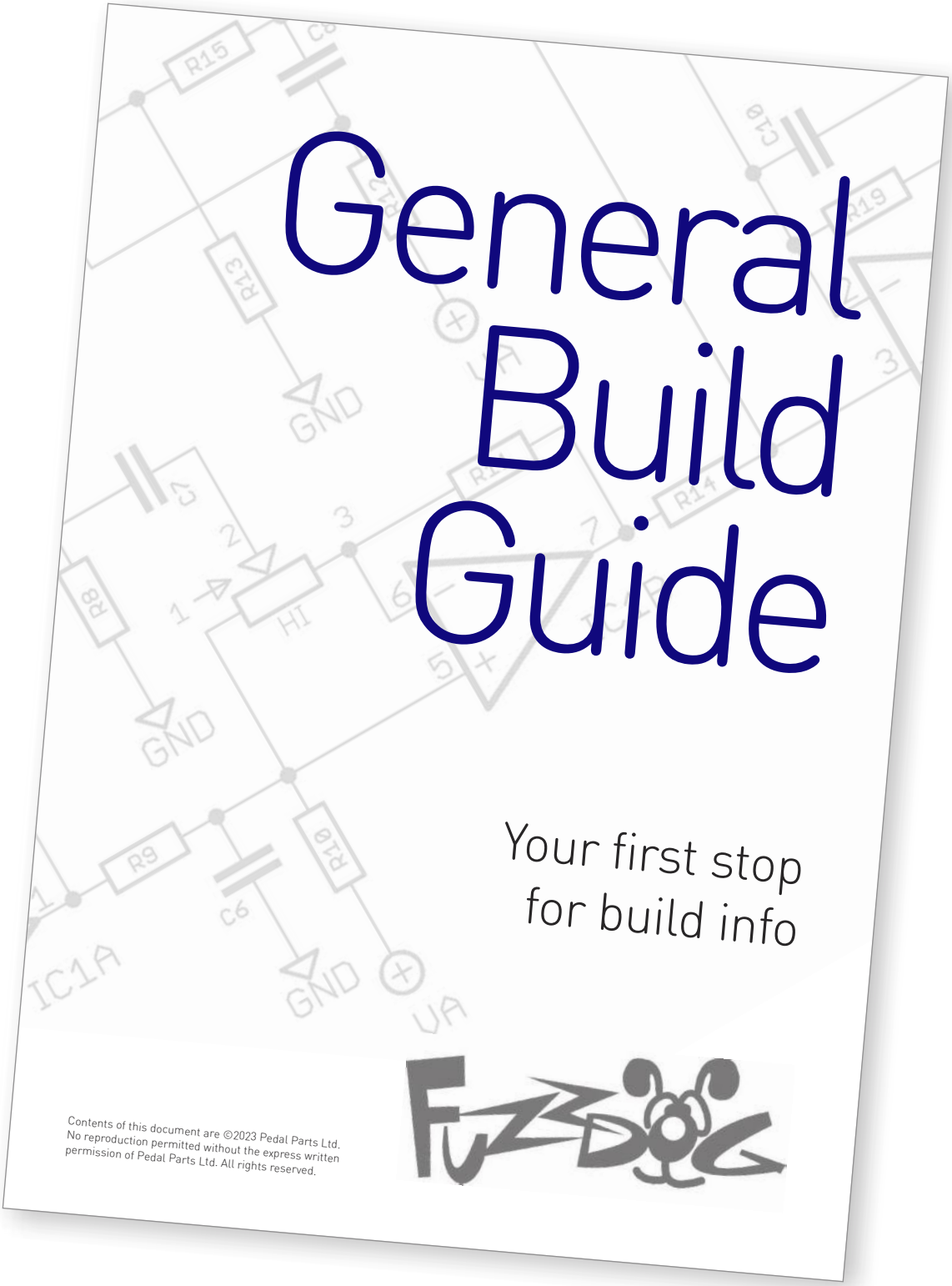

Schematic + BOM

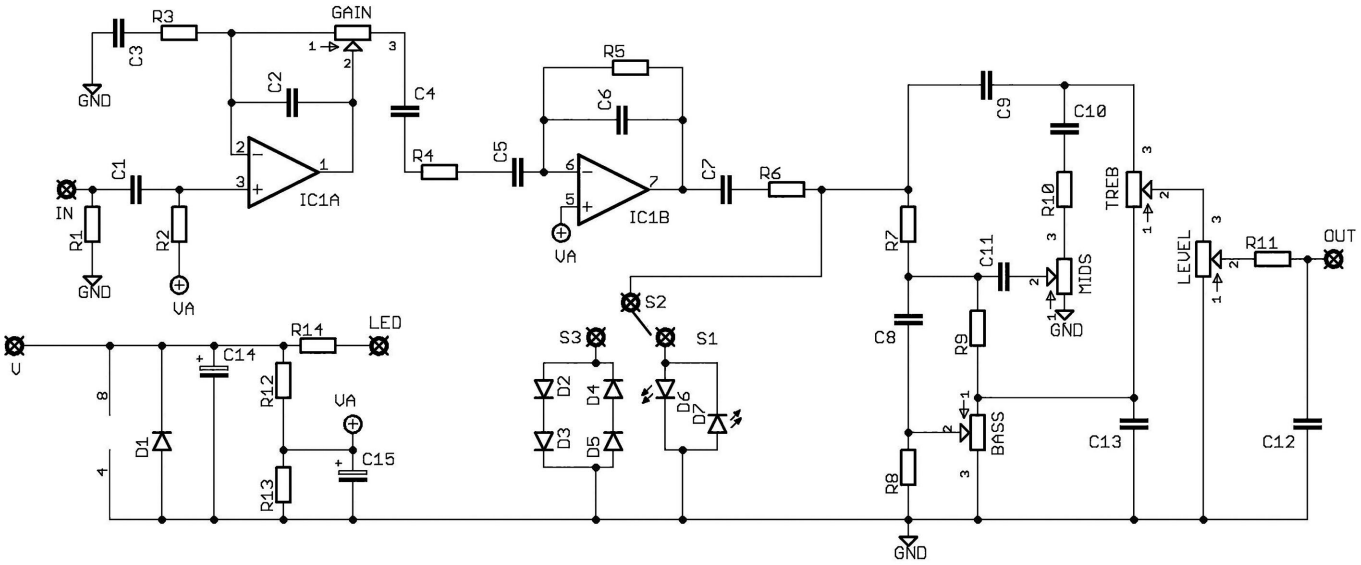

R1	2M2	C1	10n	IC1	TL072
R2	1M	C2	100p		
R3	2K2	C3	100n	D1	1N4001
R4	10K	C4	220n	D2-5	1N4148*
R5	680K	C5	100n	D6-7	3MM Red LED*
R6	1K	C6	220p		
R7	1K5	C7	220n	GAIN	100KB
R8	680R	C8	100n	LEVEL	100KB
R9	680R	C9	4n7	TREB	10KB
R10	100R	C10	10n	MID	10KA
R11	22K	C11	220n	BASS	10KA
R12	47K	C12	470p		
R13	47K	C13	68n	SWITCH	SPDT ON-ON*
R14	Empty	C14	100u elec		
		C15	10u elec		

*The switch, extra 1N4148 and red LEDs give optional extra clipping configurations. See later in the document.

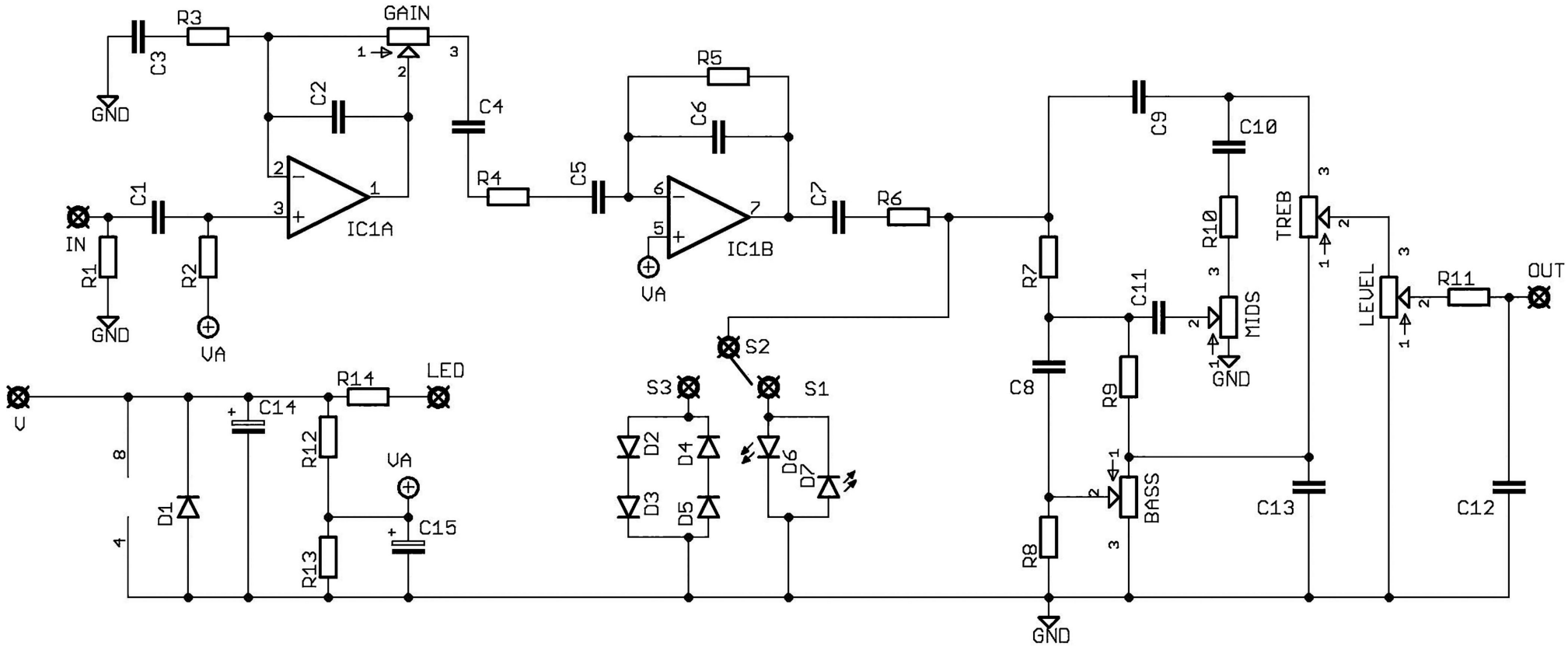
R3
GAIN
C3
GND
C2
C4
R5
C6
C9
C10
C1
IN
R1
R2
VA
IC1A
R4
C5
IC1B
C7
R6
R10
TREB
LEVEL
R11
OUT
R7
C11
MIDS
S2
S1
S3
C8
R9
BASS
C13
C12
R8
R14
LED
C14
R12
R13
C15
D1
D2
D3
D4
D5
D6
D7
C

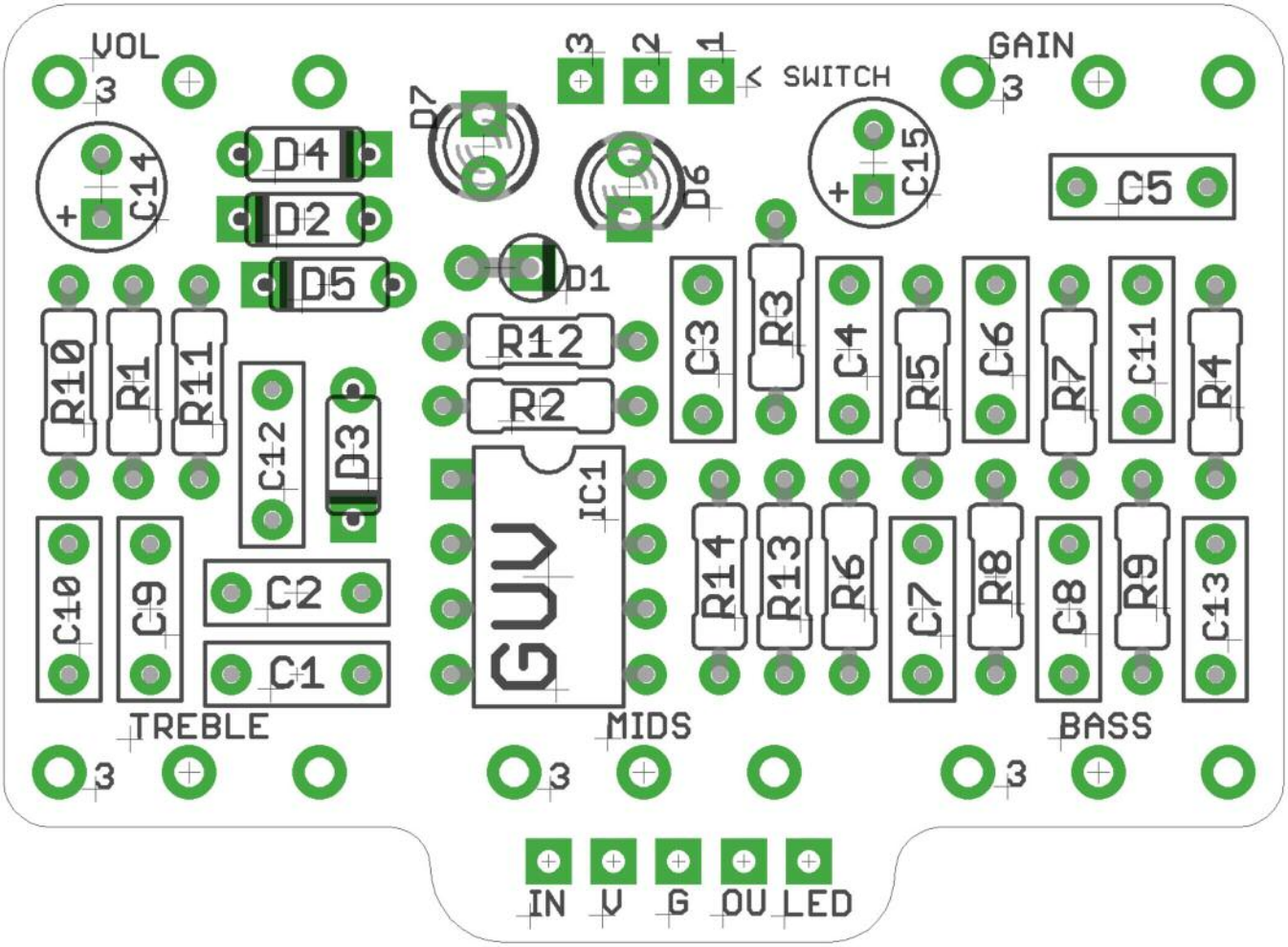

Snap the small metal tag off the pots so they can be mounted flush in the box.

You should solder all other board-mounted components before you solder the pots.

Once they're in place you'll have no access to much of the board.

R14 was the original current limiting resistor for your LED in the days before we supplied footswitch daughterboards. This is now redundant. Leave it empty and ignore the LED pad.

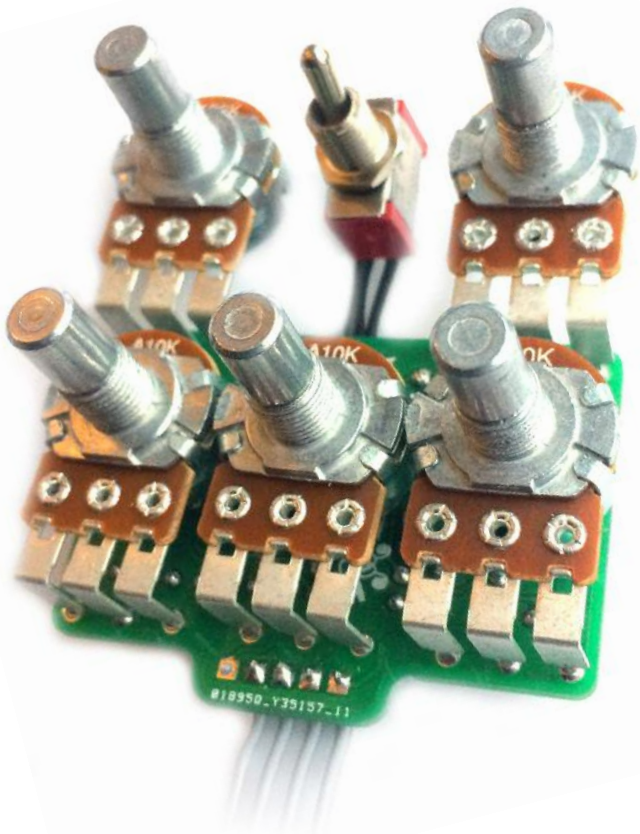

Clipping options

Extra pads have been added to the PCB to allow experimentation with clipping, and even the option to have two different configurations selectable with a toggle switch.

STOCK CLIPPING

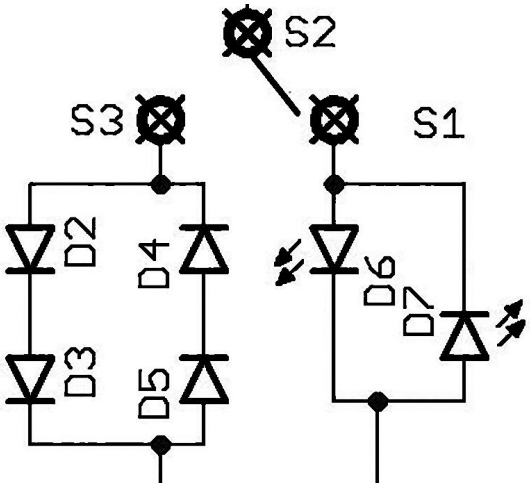

To go with standard Guv clipping, you should use a 1N4148 in both D2 and D4, placing jumpers across D3 and D5. A further jumper should then be placed across switch pads 2 and 3.

THE BOARD IS YOUR OYSTER...

You can also experiment within that clipping network. Try adding a single extra 1N4148 in D5, leaving a jumper in D3, to give asymetrical clipping. Filling all four diode spots in this network will give you a more compressed tone. You don't have to use 1N4148. Different diodes will yield totally different results. Try combinations of germaniums, BAT41, 1N4001 - pretty much anything you can get your hands on. You should always have at least one diode in each direction, i.e. at least D2 and D4, not just D2.

There's a second, independent clipping network consisting of D6 and D7. These spots are meant for LEDs, but there's nothing stopping you putting 'normal' diodes in those spots if you prefer.

If you're ONLY using the D6-D7 clipping section, put a jumper across switch pads 1 and 2.

I WANT IT ALL ...

Sure. Why not? You can have two different clipping set-ups selectable with a SPDT toggle switch. Just place your diodes as you want them and wire up the switch (shown from bottom):

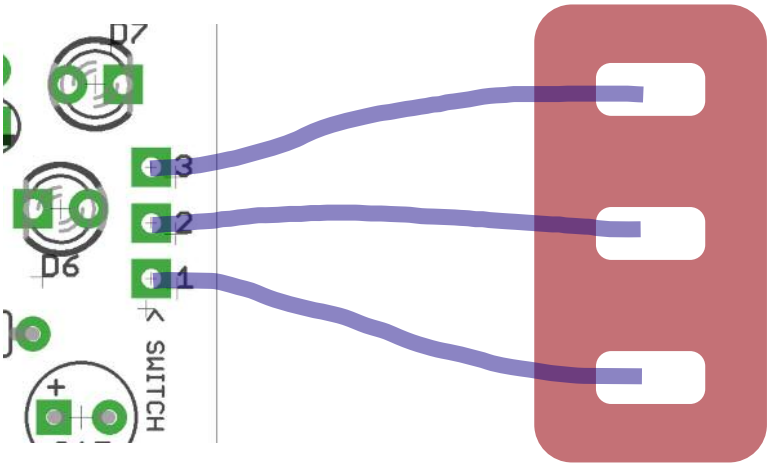

Drilling template

Hammond 1590B - 60 x 111 x 31mm

Drill sizes listed are minimum.
It's a good idea to add 1mm to anything mounted on the PCB that'll poke through the front of the enclosure.

Drill sizes:

Pots	7mm
Jacks	10mm
Footswitch	12mm
DC Socket	12mm
Toggle switches	6mm
Rotary switches	10mm

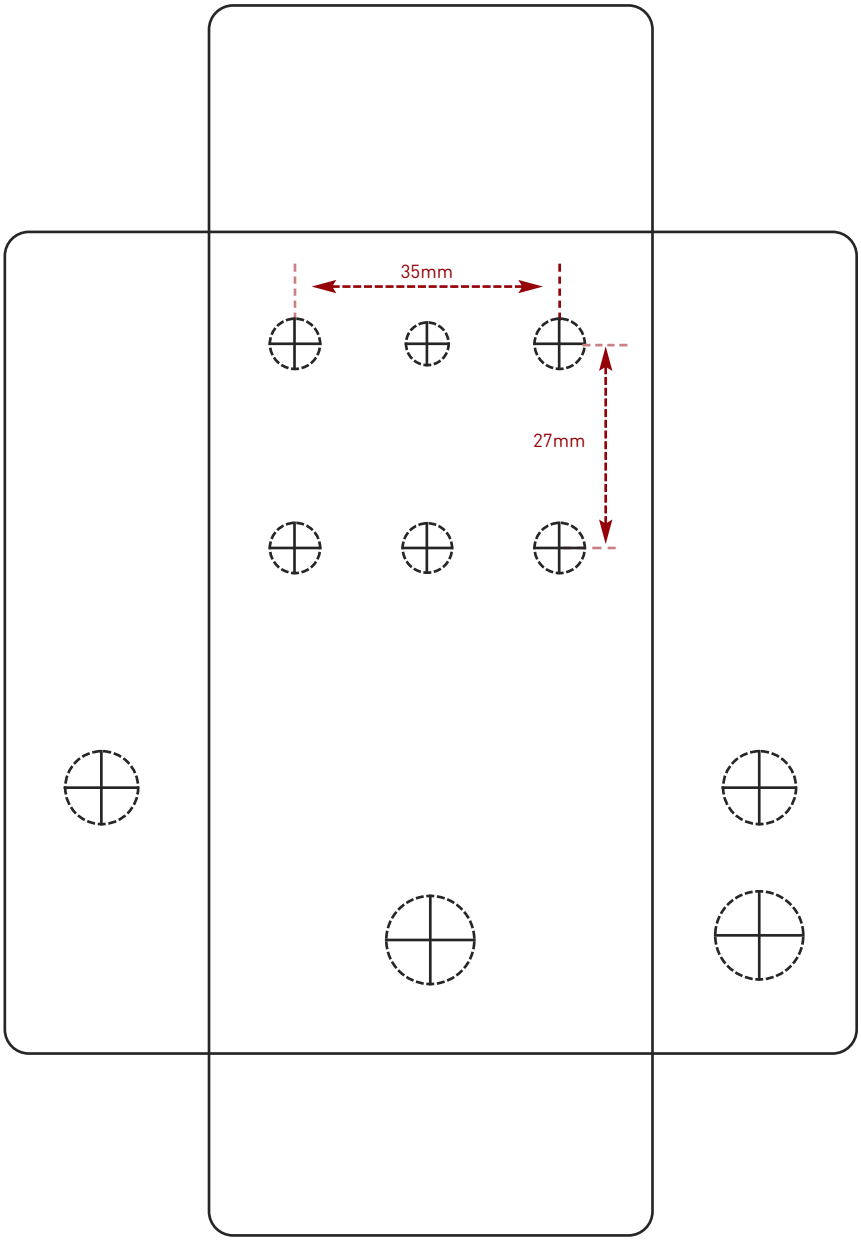

This template is a rough guide only. You should ensure correct marking of your enclosure before drilling. You use this template at your own risk.
Pedal Parts Ltd can accept no responsibility for incorrect drilling of enclosures.

FuzzDog.co.uk