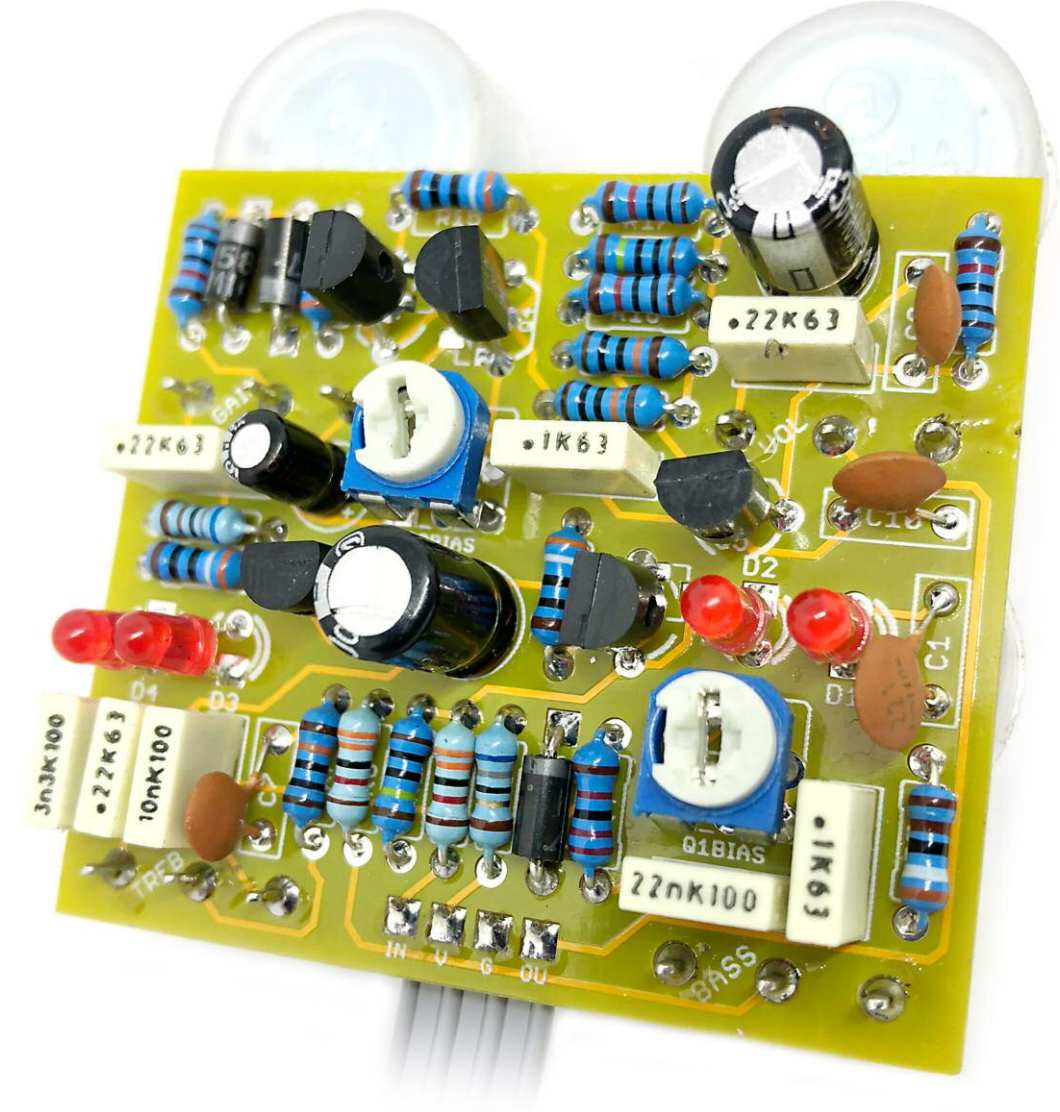

Ginger

RunOffGroove's excellent Portaflex-in-a-box

Important notes

If you're using any of our footswitch daughterboards, DOWNLOAD THE DAUGHTERBOARD DOCUMENT

- Download and read the appropriate build document for the daughterboard as well as this one BEFORE you start.
- DO NOT solder the supplied Current Limiting Resistor (CLR) to the main circuit board even if there is a place for it. This should be soldered to the footswitch daughterboard.

POWER SUPPLY

Unless otherwise stated in this document this circuit is designed to be powered with 9V DC.

COMPONENT SPECS

Unless otherwise stated in this document:

- Resistors should be 0.25W. You can use those with higher ratings but check the physical size of them.
- Electrolytics caps should be at least 25V for 9V circuits, 35V for 18V circuits. Again, check physical size if using higher ratings.

LAYOUT CONVENTIONS

Unless otherwise stated in this document, the following are used:

- **Electrolytic capacitors:**
  Long leg (anode) to square pad.
- **Diodes:**
  Striped leg (cathode) to square pad.
- **ICs:**
  Square pad indicates pin 1.

Schematic + BOM

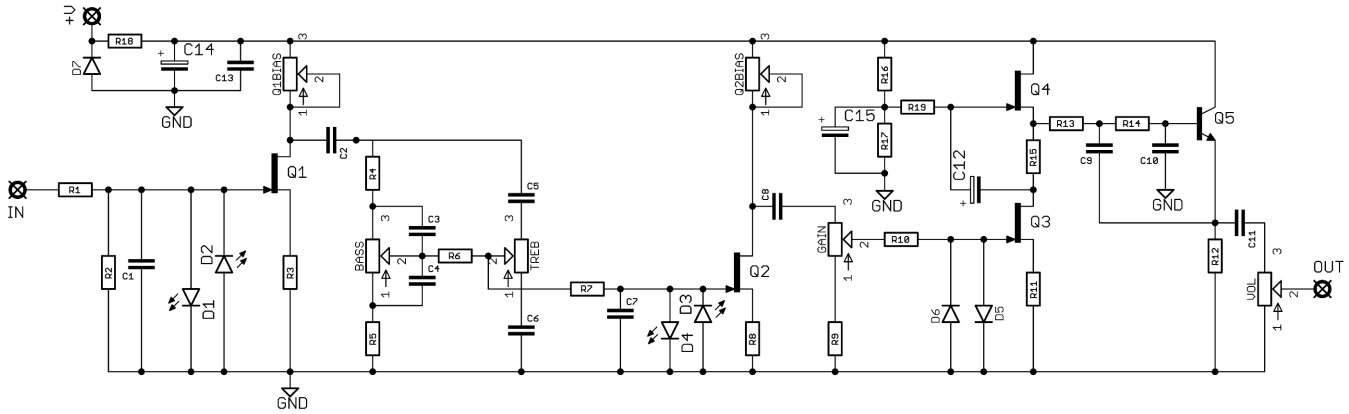

R1	33K
R2	1M
R3	390R
R4	22K
R5	3K9
R6	33K
R7	100K
R8	390R
R9	6K8
R10	10K
R11	390R
R12	10K
R13	100K
R14	100K
R15	390R
R16	10K
R17	10K
R18	68R
R19	1M

C1	220p
C2	220n
C3	22n
C4	100n
C5	3n3
C6	10n
C7	100p
C8	220n
C9	470p
C10	220p
C11	220n
C12	2u2 elec
C13	100n
C14	100u elec
C15	100u elec

Q1-4	2N5457* or MMBF5457
Q5	2N5088
D1-4	3MM RED LED
D5-6	1N5818
D7	1N4001
Q1-BIAS	4K7 / 5K TRIM
Q2-BIAS	4K7 / 5K TRIM
BASS	100KA
TREB	100KA
GAIN	100KA
VOL	100KA

*PCB is designed to take through-hole or SMT parts for the FETs

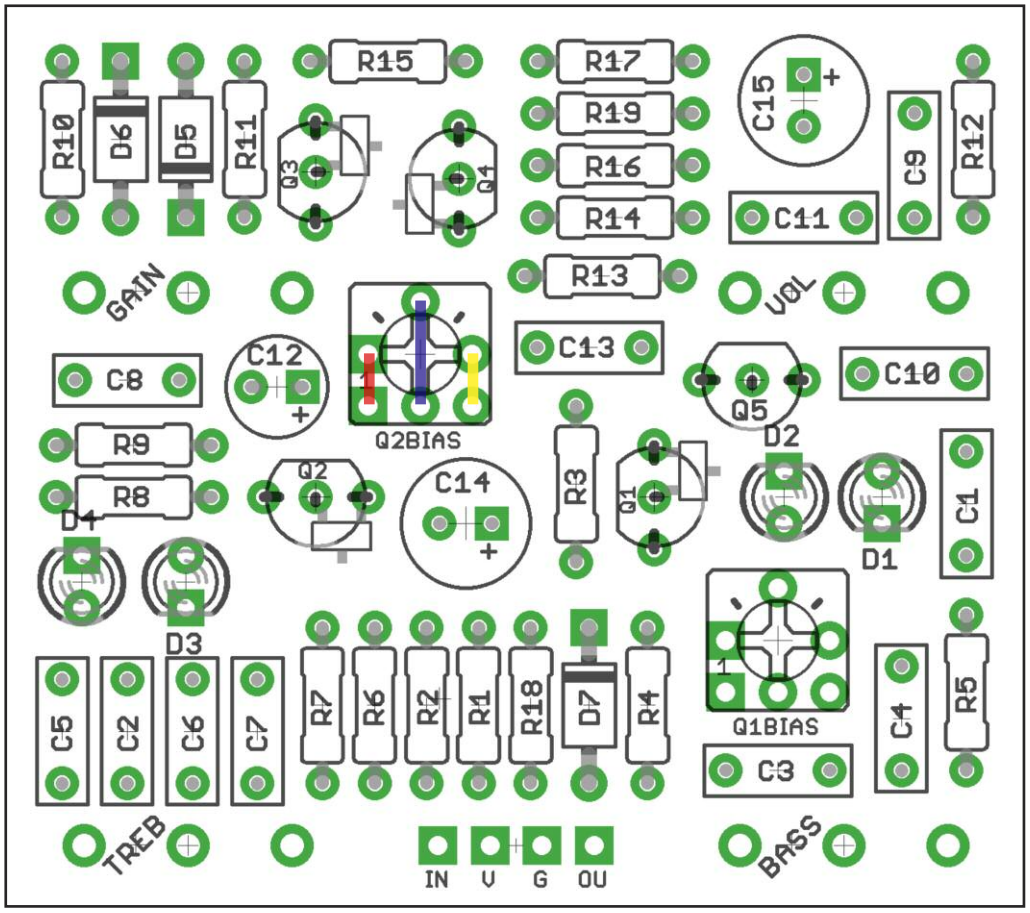

PCB layout ©2018 Pedal Parts Ltd.

The power and signal pads on the PCB conform to the FuzzDog Direct Connection format, so can be paired with the appropriate daughterboard for quick and easy offboard wiring. Check the separate daughterboard document for details.

Be very careful when soldering the LEDs, diodes and transistors. They're very sensitive to heat. You should use some kind of heat sink (crocodile clip or reverse action tweezers) on each leg as you solder them. Keep exposure to heat to a minimum (under 2 seconds).

Snap the small metal tag off the pots so they can be mounted flush in the box.

You should solder all other board-mounted components before you solder the pots. Once they're in place you'll have no access to much of the board. Make sure your pots all line up nicely. The best way to do that is to solder a single pin of each pot in place then melt and adjust if necessary before soldering in the other two pins. If your pots don't have protective plastic jackets ensure you leave a decent gap between the pot body and the PCB otherwise you risk shorting out the circuit.

To get the pots and switches level it's best to use the enclosure as a guide.

Extra pads are provided for the trimmers so you can use your preferred type. Coloured bands above indicate which pads are connected together.

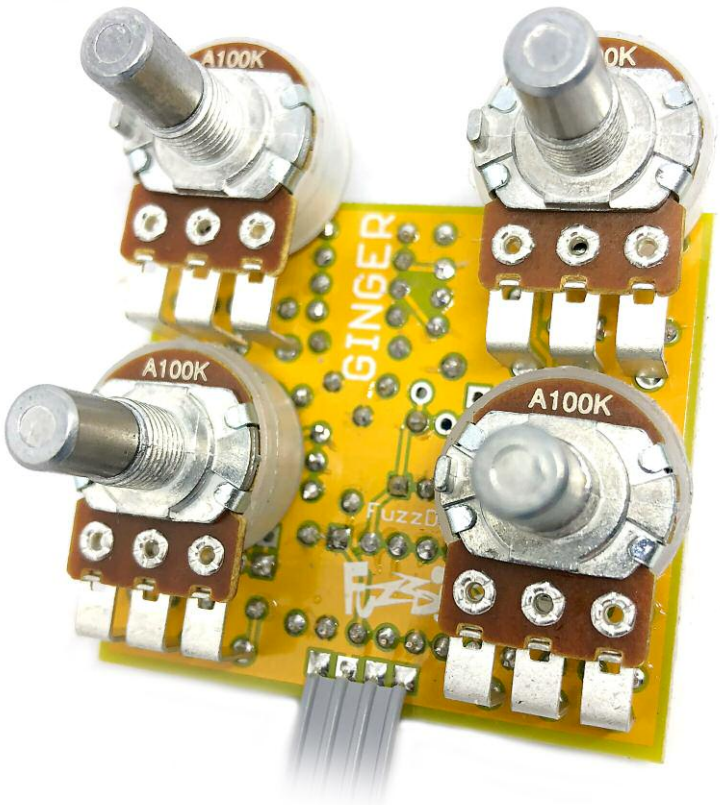

Biasing

Q1 and Q2 need to be biased correctly to get the circuit working. You can do this by ear if you want, but it's best to use a mutimeter.

Set it to DC voltage and attach the common lead to any GND point. Use the positive probe to check your voltage reading on the DRAIN of Q1.

Adjust the Q1BIAS trimmer until you get as close to 6V as possible.

Repeat with Q2/Q2BIAS.

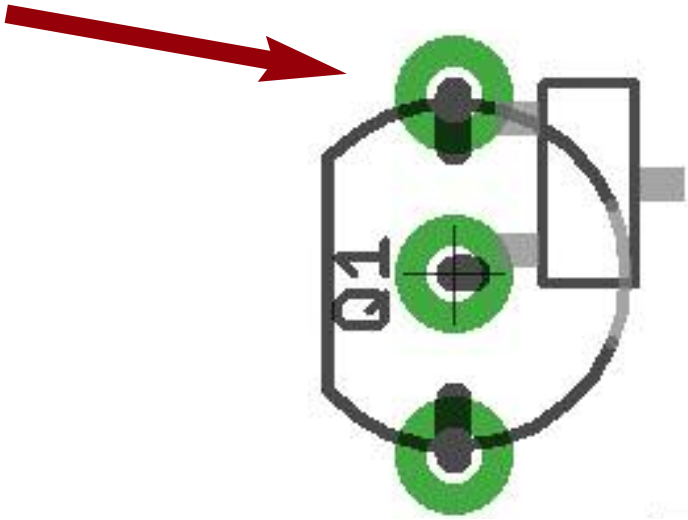

Test the board!

Check the relevant daughterboard document for more info before you undertake this stage.

UNDER NO CIRCUMSTANCES will troubleshooting help be offered if you have skipped this stage. No exceptions.

Once you've finished the circuit it makes sense to test is before starting on the switch and LED wiring. It'll cut down troubleshooting time in the long run. If the circuit works at this stage, but it doesn't once you wire up the switch - guess what? You've probably made a mistake with the switch.

Solder some nice, long lengths of wire to the board connections for 9V, GND, IN and OUT. Connect IN and OUT to the jacks as shown. Connect all the GNDs together (twist them up and add a small amount of solder to tack it). Connect the battery + lead to the 9V wire, same method. Plug in. Go!

If you're using a ribbon cable you can tack the wires to the ends of that. It's a lot easier to take them off there than it is do desolder wires from the PCB pads.

If it works, carry on and do your switch wiring. If not... aw man. At least you know the problem is with the circuit. Find out why, get it working, THEN worry about the switch etc.

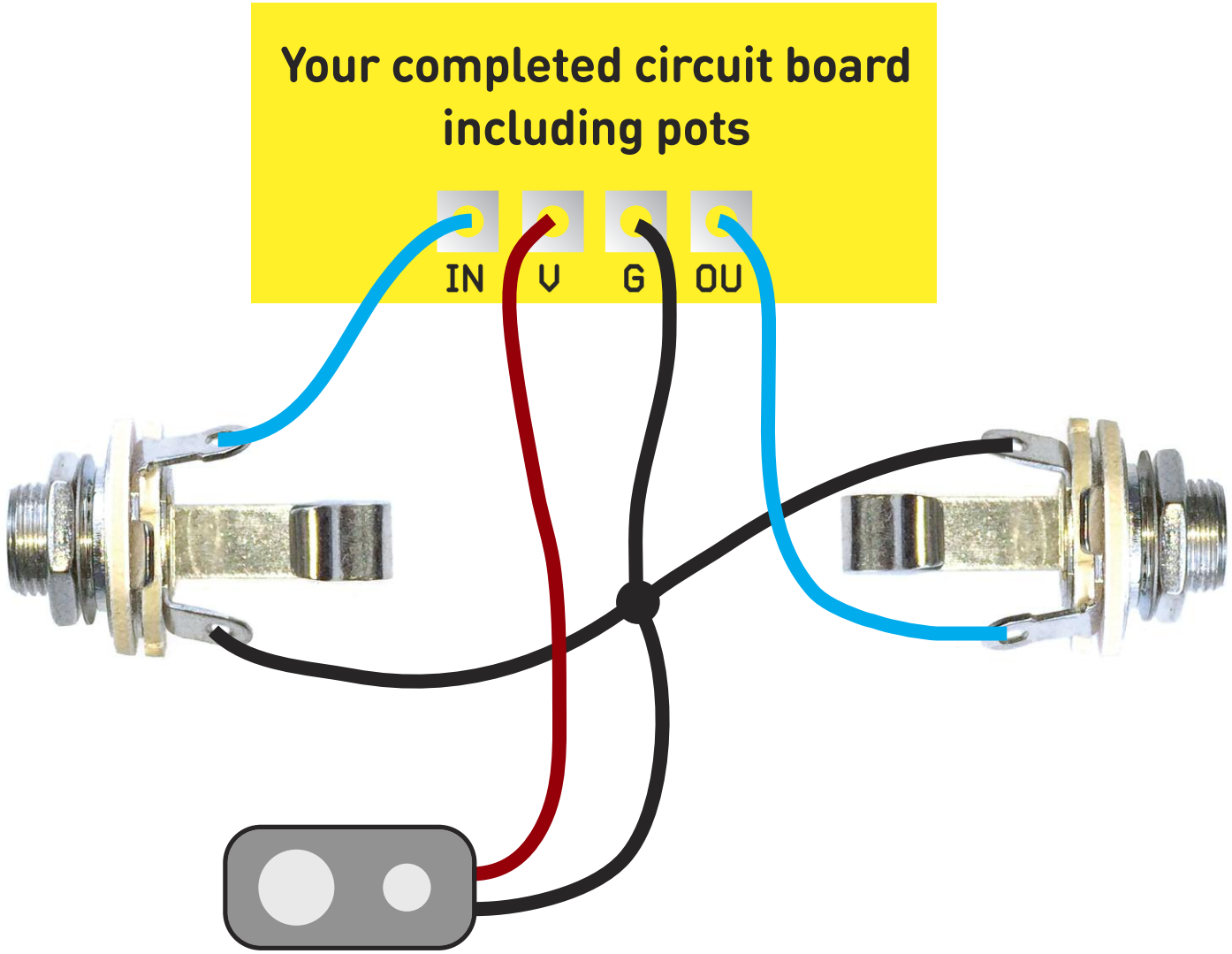

Wire it up (if using a daughterboard please refer to the relevant document)

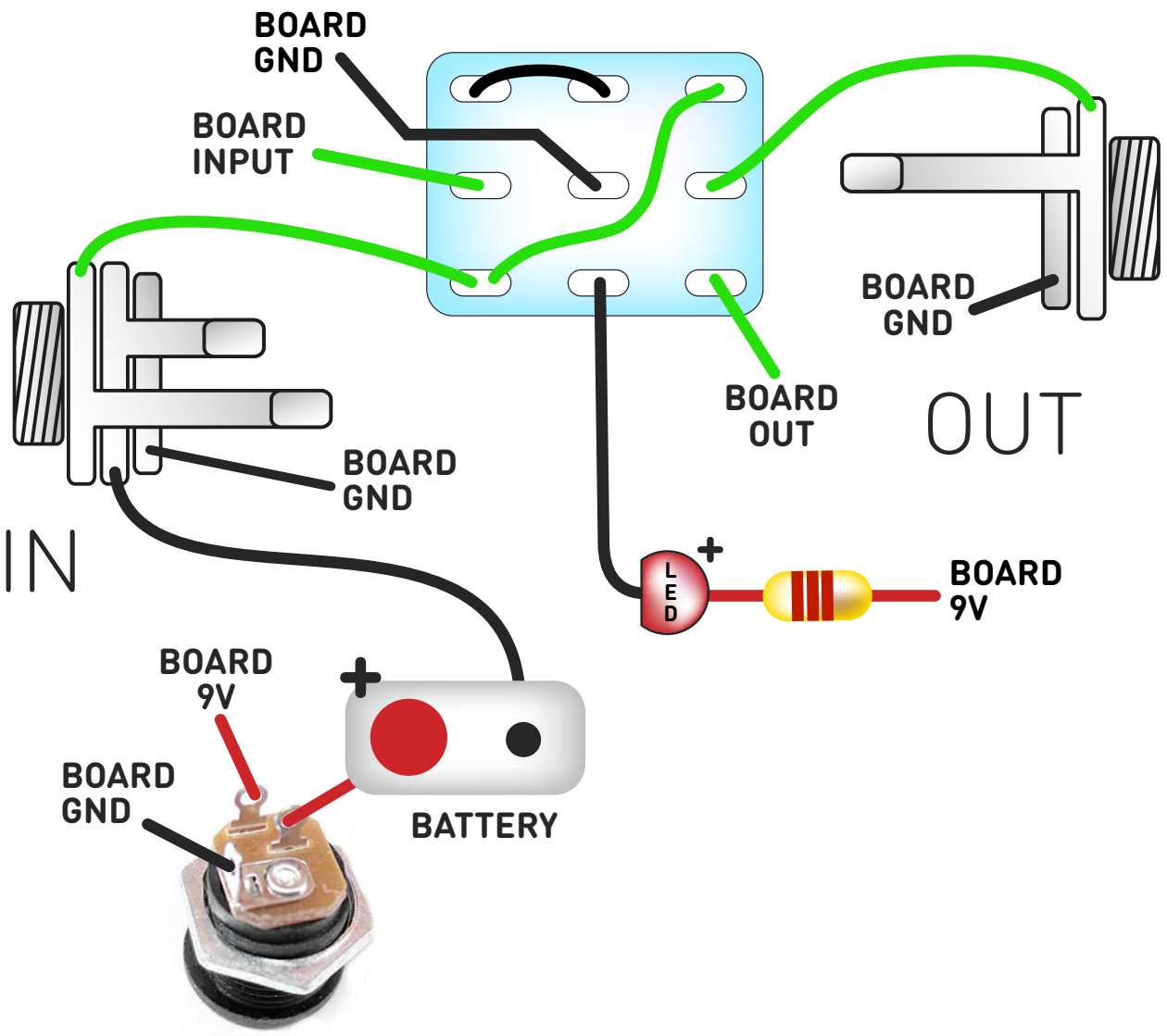

Wiring shown above will disconnect the battery when you remove the jack plug from the input, and also when a DC plug is inserted.

The Board GND connections don't all have to directly attach to the board. You can run a couple of wires from the DC connector, one to the board, another to the IN jack, then daisy chain that over to the OUT jack.

It doesn't matter how they all connect, as long as they do.

This circuit is standard, Negative GND. Your power supply should be Tip Negative / Sleeve Positive. That's the same as your standard pedals (Boss etc), and you can safely daisy-chain your supply to this pedal.

Drilling template

Hammond 1590B

60 x 111 x 31mm

It's a good idea to drill the pot and toggle switch holes 1mm bigger if you're board-mounting them.
Wiggle room = good!

Recommended drill sizes:

Pots	7mm
Jacks	10mm
Footswitch	12mm
DC Socket	12mm

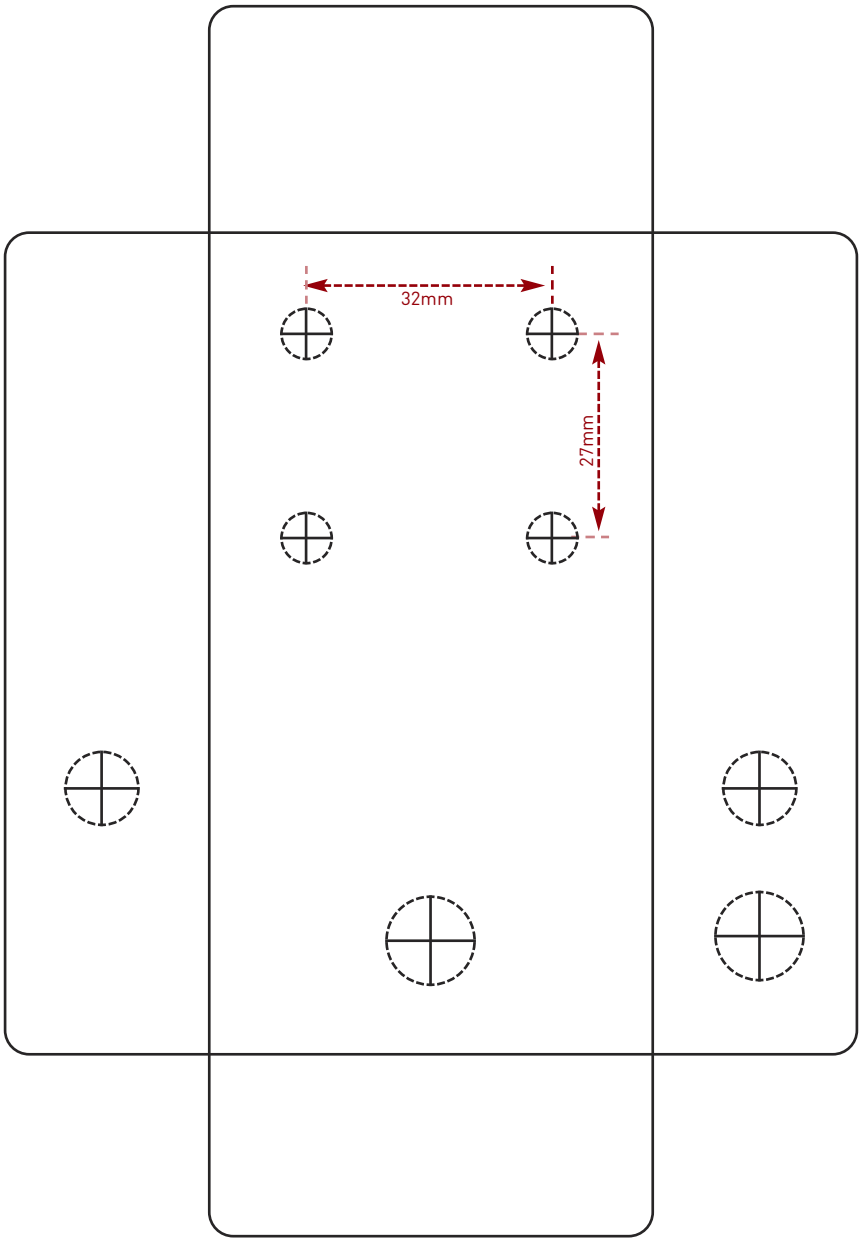

This template is a rough guide only. You should ensure correct marking of your enclosure before drilling. You use this template at your own risk.
Pedal Parts Ltd can accept no responsibility for incorrect drilling of enclosures.

FuzzDog.co.uk