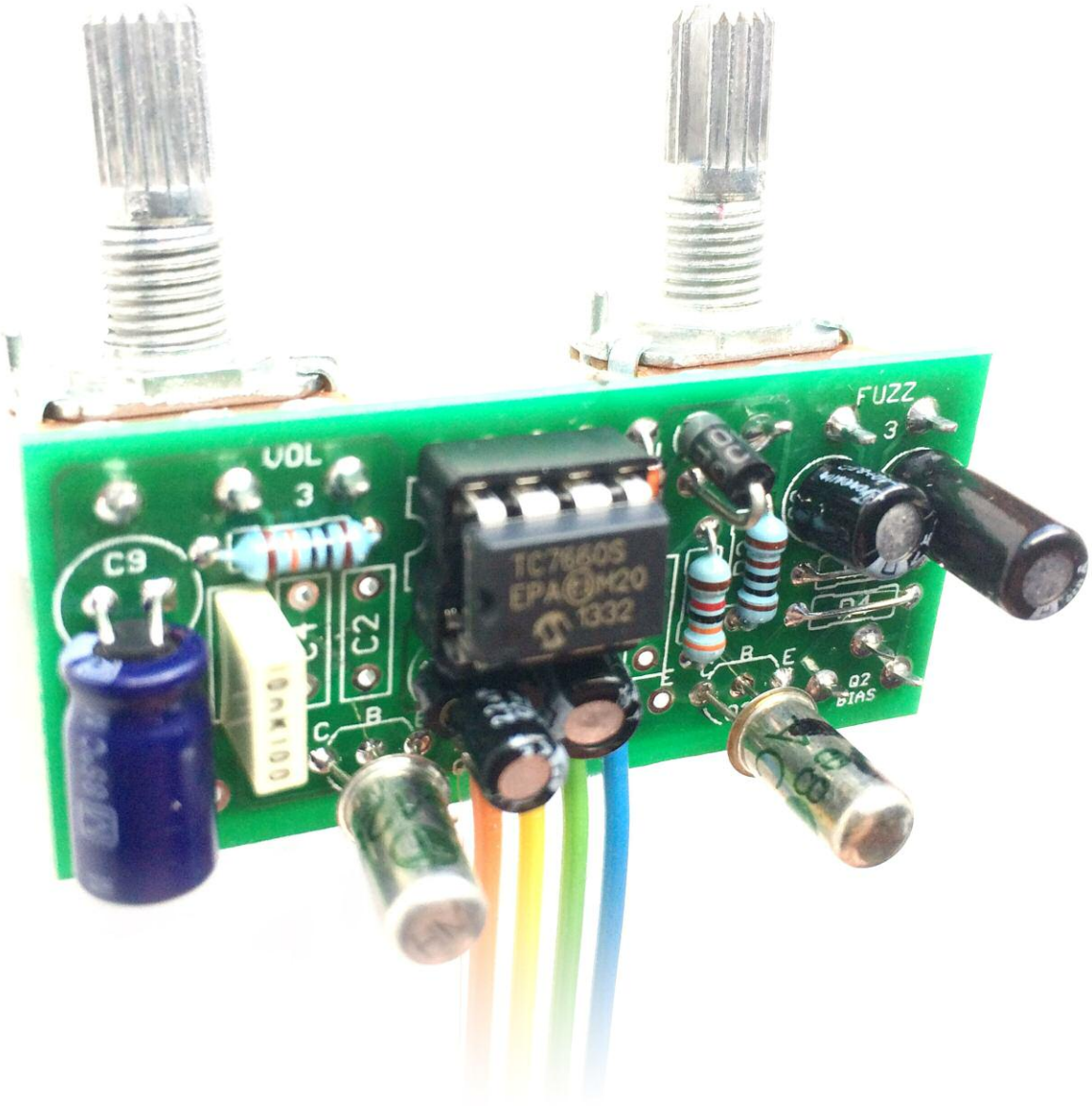

Fuzz Face

Vintage fuzz with optional voltage inverter

IMPORTANT STUFF

Go no further until you've read this page.

If you aren't using the voltage inverter you must connect pads J1 and J2 with a jumper wire. Otherwise leave them empty.

Under no circumstances should you include the voltage inverter parts AND connect J1 and J2. The world will end.

If you're building a classic germanium version, Transistor hFE values should be approx:

Q1 - 70
Q3 - 100-120

To be honest, you'll probably get satisfactory or even excellent results with different values, but these are the generally accepted standard.

CAPACITOR ORIENTATION

C6 and C7 are oriented for PNP builds. If you're building an NPN version you must reverse these, i.e. long leg (+) in round pad.

JUMPERS

Most builds will only have a trimmer on Q2.
If you aren't using a trimmer in Q1BIAS you must place a jumper wire across these two pads >

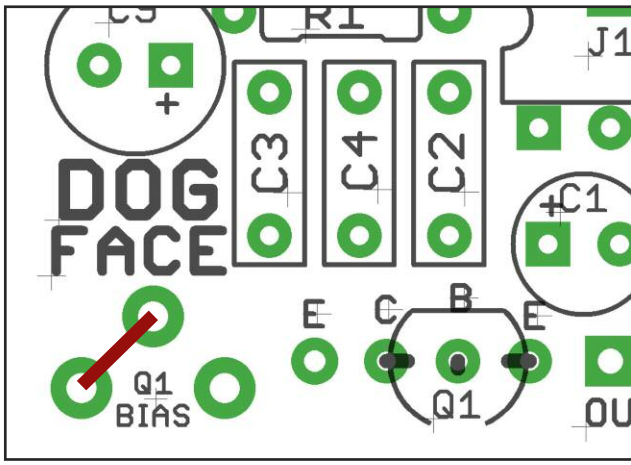

Same goes for R4 and R5. Barely used, so jumper them unless otherwise shown in the BOM.

There are other components that aren't used in many builds, but these just stay empty rather than being jumpered.

Schematic - VOLTAGE INVERTER

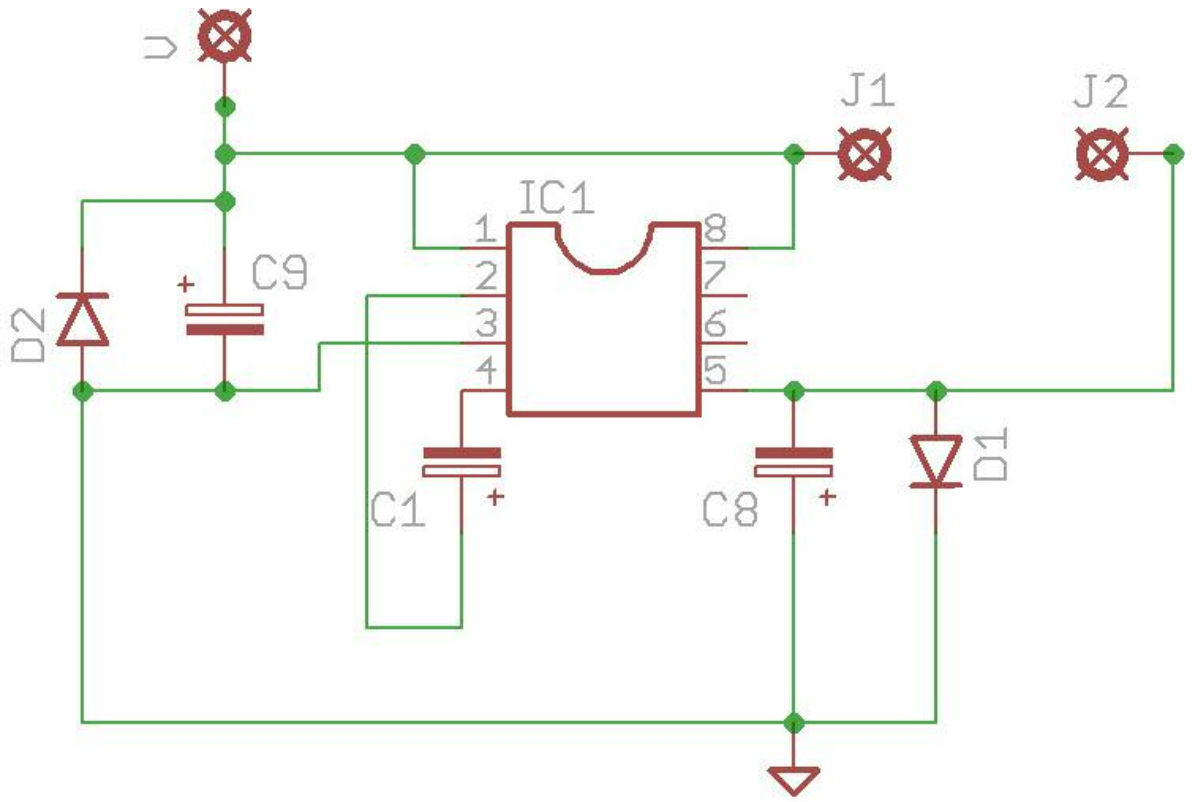

C1 10u elec
C8 10u elec
C9 100u elec

D1 1N4148
D2 1N4001

IC1 7660S

The voltage inverter circuitry incoporated into the PCB allows you to power a positive-ground version of the Fuzz Face on your normal negative-ground supply chain.

If you aren't using the voltage inverter you must connect pads J1 and J2 together. Nothing else in this circuit is required.

Why wouldn't you use it? If you're building a version with NPN transistors, or you simply want to power a PNP version with its own supply.

In all the following schematics, V is shown instead of J2. That represents the point at which voltage enters the circuit. As you can see above, if you're using the inverter it comes from pin 5 of the IC, which will be -9V. If not using it, it'll be 9v straight from the V pad, as J1 and J2 are joined.

Schematic

ORIGINAL PNP

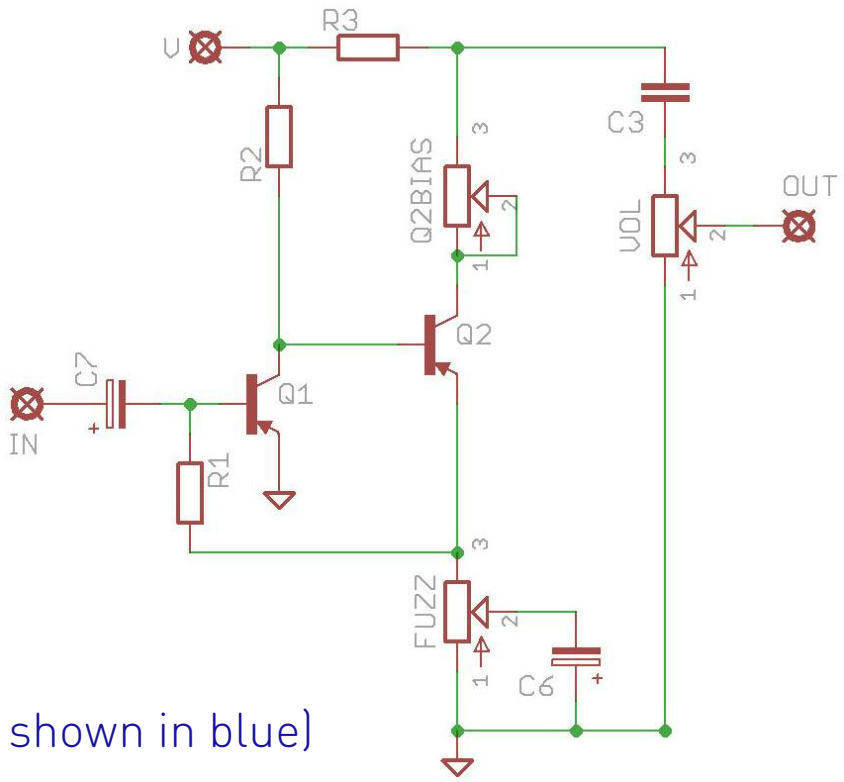

BOM

(Hendrix/Mayer changes shown in blue)

R1	100K
R2	33K
R3	470R (1K)
R4	Jumper
R5	Jumper
C3	10n
C6	22u electrolytic
C7	2u2 electrolytic

Q2 BIAS	47K Trimmer
Q1-2	PNP Ge
FUZZ	1KB (2KB)
VOL	500KA

Adjust Q2 BIAS until it sounds sweet. Q2 collector should be around 4.5V, but trust your ears over numbers.

If you want to use NPN transistors, simply reverse the polarity of C7 and C6.
DO NOT USE THE VOLTAGE INVERTER IF YOU'RE USING NPN CANS!

Schematic

NPN SILICON

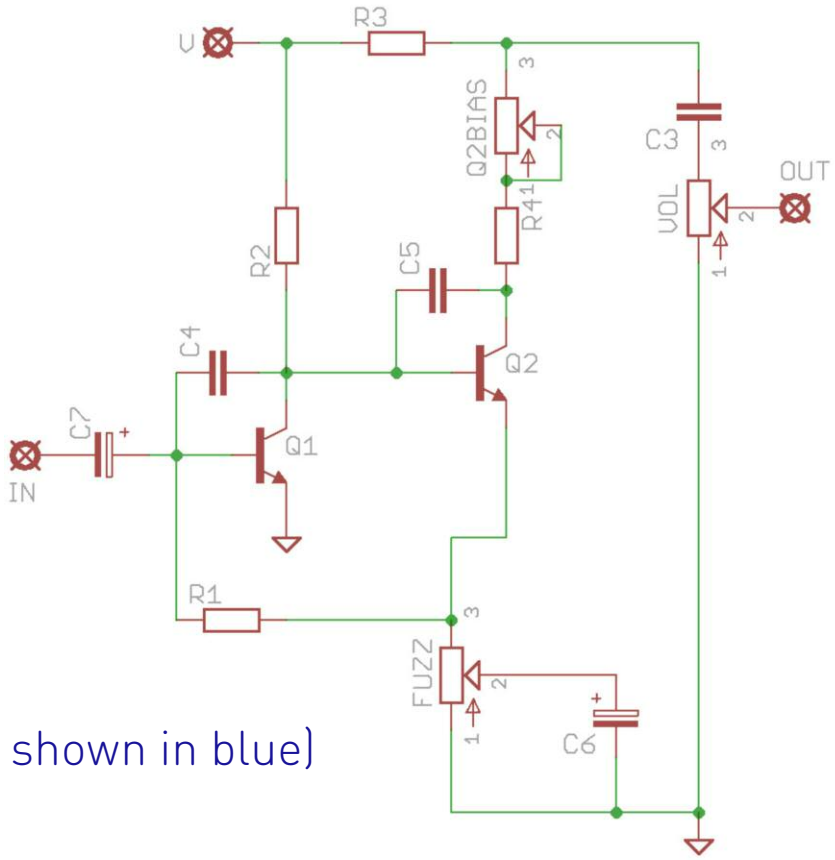

BOM

(Hendrix/Mayer changes shown in blue)

R1	100K	**Q2 BIAS**	47K Trimmer
R2	33K		
R3	470R (1K)	**Q1-2**	BC108**
R4	Jumper		
R5	Jumper	**FUZZ**	1KB (2KB)
		VOL	500KA
C3	10n		
C4	47-470p*		
C5	47-470p*		
C6	22u electrolytic		
C7	2u2 electrolytic		

*C4 and C5 tame some high-end and reduce the chance of oscillation. The higher the value, the more frequency is taken out. 100p in each is a good place to start.

**You can also try other NPN silicon transistors, but BC108 work very well.

Adjust Q2 BIAS until it sounds sweet. Q2 collector should be around 4.5V, but trust your ears over numbers.

DO NOT USE THE VOLTAGE INVERTER! This is NPN / Negative Ground.

Schematic

EE JAY MODEL

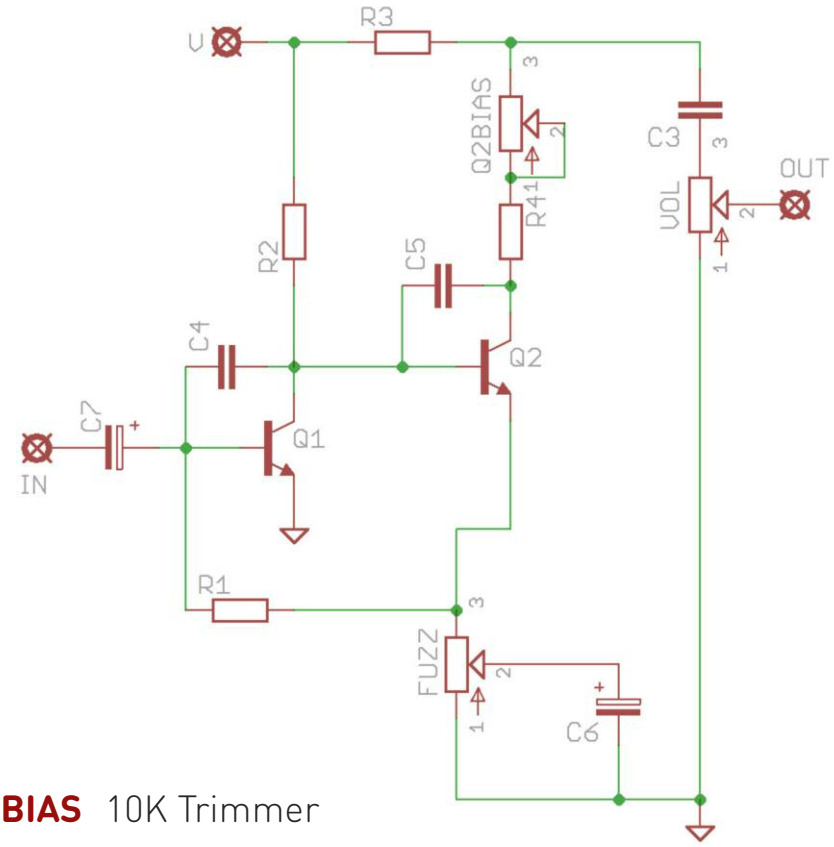

BOM

R1	120K	**Q2 BIAS**	10K Trimmer
R2	39K		
R3	332R	**Q1**	BC183
R4	6K	**Q2**	BC183C
R5	27R		
		FUZZ	1KB
C3	10n	**VOL**	470KC
C5	27p		
C6	15u electrolytic		
C7	1u electrolytic		

Seems people are trying hard to get close to the hFE values for Q1 (217) and Q2 (547) that were traced from an original model. However, if you think the manufacturers tested thousands of transistors to get every build to those EXACT specs - well.....

You can also try other NPN silicon transistors with similar gains. BC549C is ok in Q2. Check your pinouts - your BC183 may be ECB, not CBE. There are extra pads on the board so you can easily mount them.

Adjust Q2 BIAS until it sounds sweet. Q2 collector in the traced model was measured at 3.2V with a 9.47V battery supply, but trust your ears over numbers.

DO NOT USE THE VOLTAGE INVERTER! This is NPN / Negative Ground.

Schematic

JAY BEE MODEL

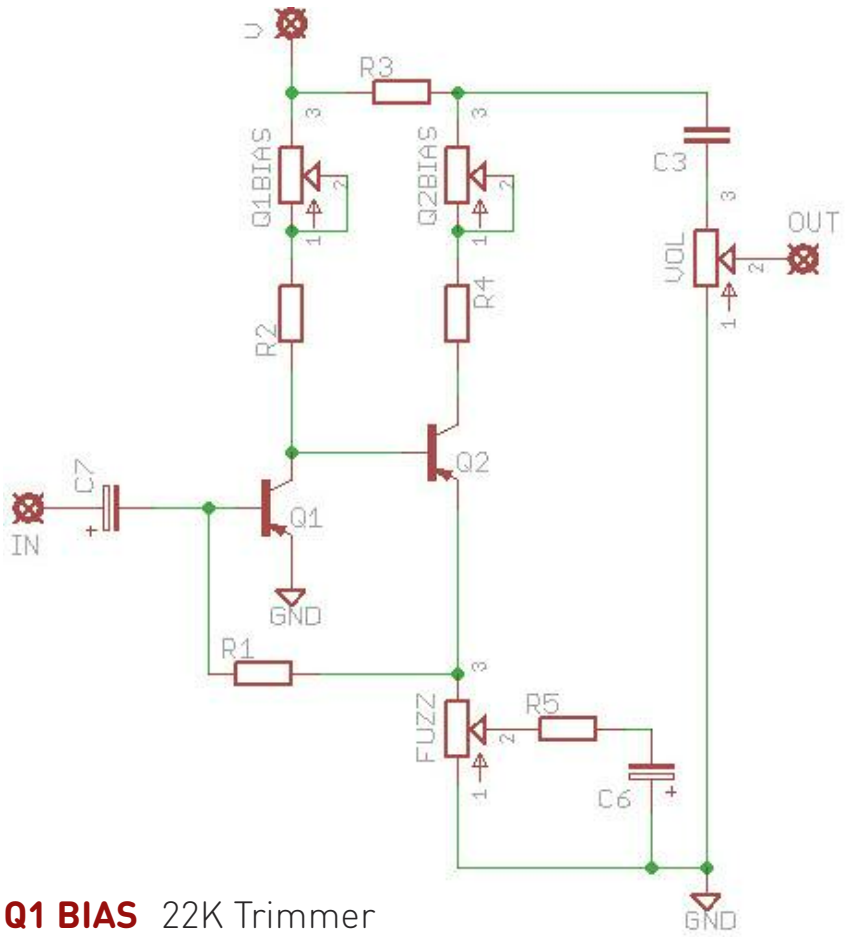

BOM

R1	100K	**Q1 BIAS**	22K Trimmer
R2	20K	**Q2 BIAS**	10K Trimmer
R3	332R		
R4	3K	**Q1**	MP39B
R5	10R	**Q2**	GT308V
C3	10n	**FUZZ**	1KB (2KB)
C6	22u electrolytic	**VOL**	500KA
C7	2u2 electrolytic		

Adjust bias trimmers until it sounds sweet. Trust your ears over numbers.

THIS IS PNP / POSITIVE GROUND. USE THE INVERTER OR WIRE FOR POSI-GND.

PIN-OUTS

MP39 (viewed from below)

B

E **C**

GT308V

Dot indicates Emitter
Middle leg is Collector

PCB Layout

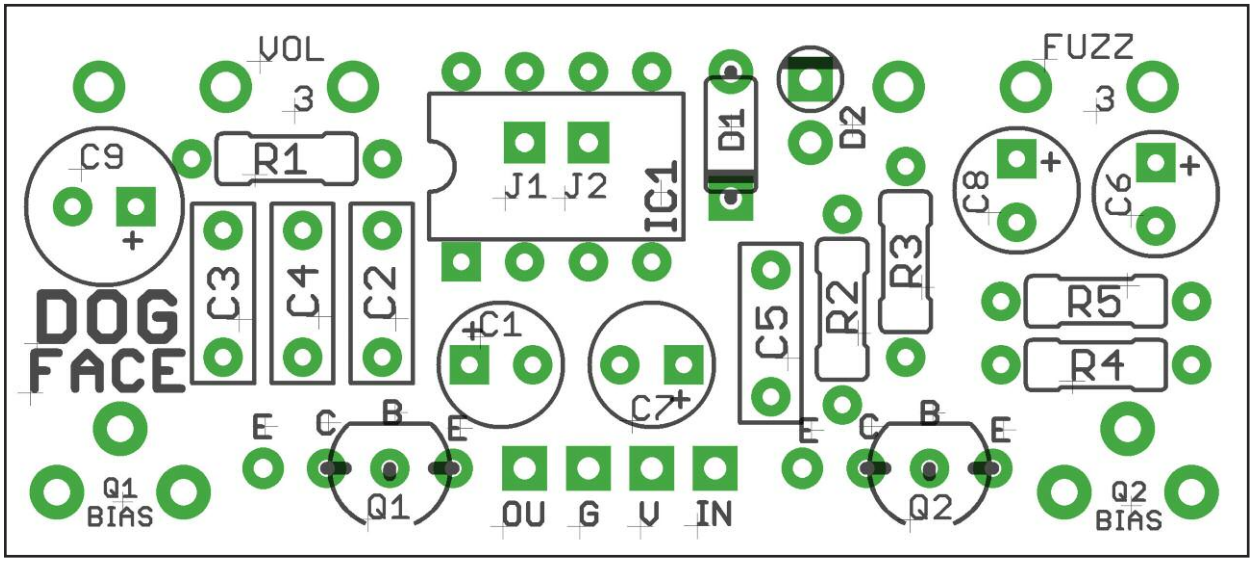

The power and signal pads on the PCB conform to the FuzzDog Direct Connection format, so can be paired with the appropriate daughterboard for quick and easy offboard wiring.

Snap the small metal tag off the pots so they can be mounted flush in the box.

Pots mount on the opposite side of the board to the other components.

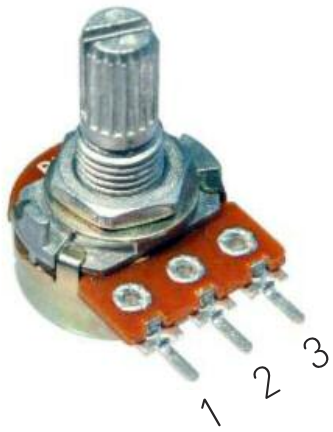

Extra pads are included for the Emitter on both transistors to easily accommodate non-standard pinouts.

Test the board!

NPN and Voltage Inverter builds

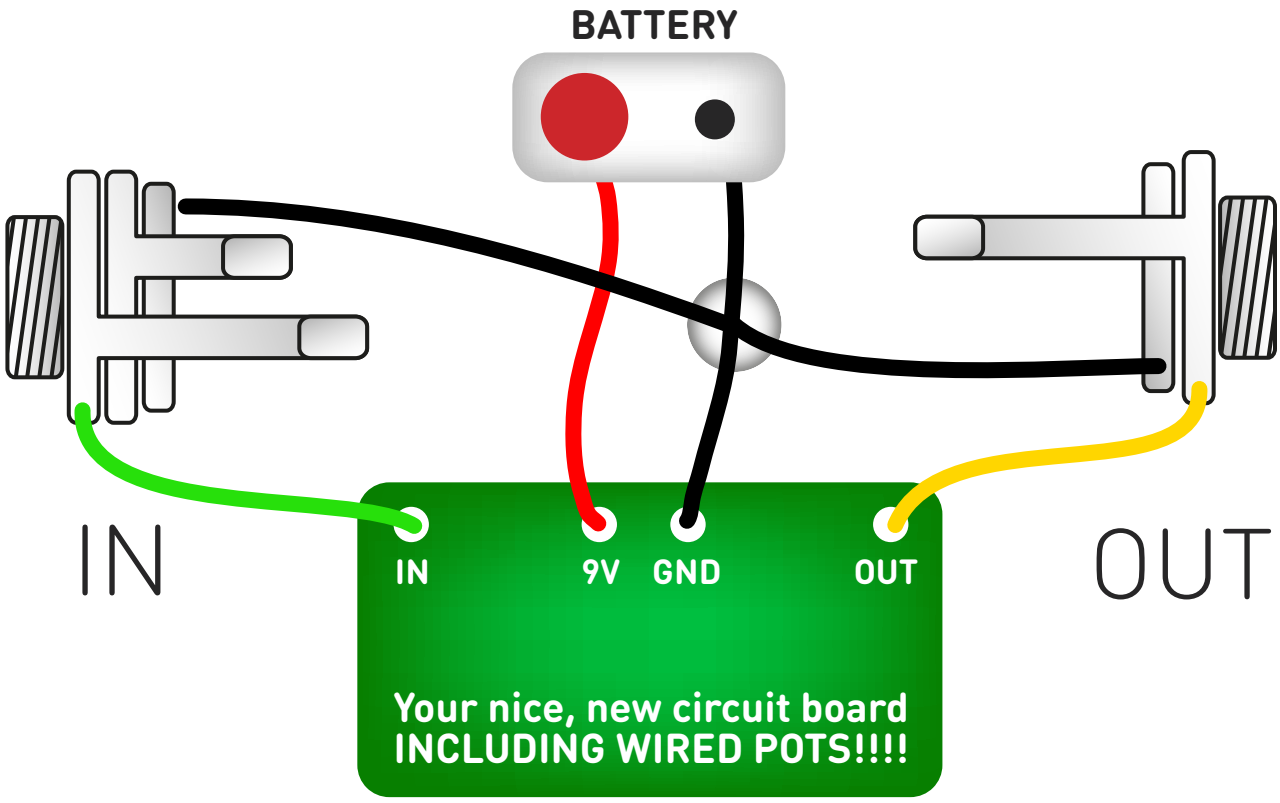

UNDER NO CIRCUMSTANCES will troubleshooting help be offered if you have skipped this stage. No exceptions.

Once you've finished the circuit it makes sense to test is before starting on the switch and LED wiring. It'll cut down troubleshooting time in the long run. If the circuit works at this stage, but it doesn't once you wire up the switch - guess what? You've probably made a mistake with the switch.

Solder some nice, long lengths of wire to the board connections for 9V, GND, IN and OUT. Connect IN and OUT to the jacks as shown. Connect all the GNDs together (twist them up and add a small amount of solder to tack it). Connect the battery + lead to the 9V wire, same method. Plug in. Go!

If it works, crack on and do your switch wiring. If not... aw man. At least you know the problem is with the circuit. Find out why, get it working, THEN worry about the switch etc.

Test the board!

PNP builds without Voltage Inverter

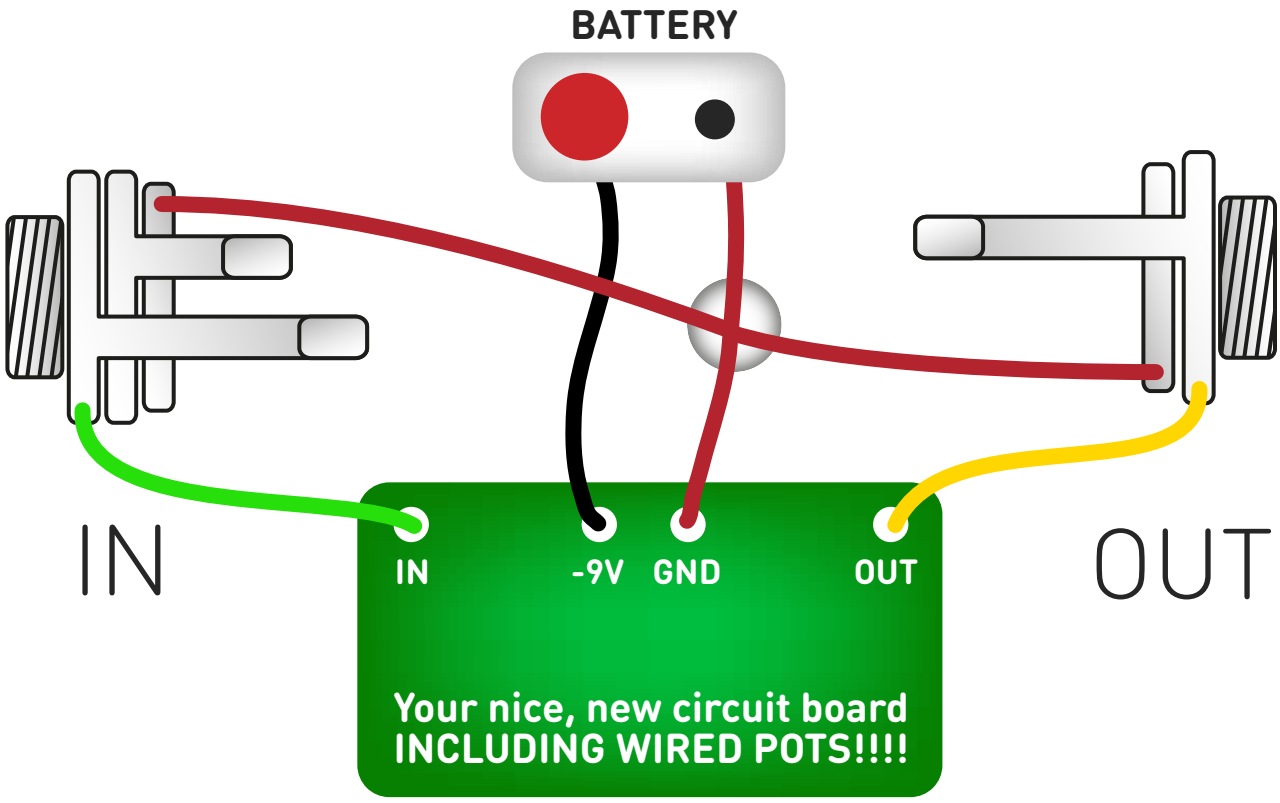

UNDER NO CIRCUMSTANCES will troubleshooting help be offered if you have skipped this stage. No exceptions.

Once you've finished the circuit it makes sense to test is before starting on the switch and LED wiring. It'll cut down troubleshooting time in the long run. If the circuit works at this stage, but it doesn't once you wire up the switch - guess what? You've probably made a mistake with the switch.

Solder some nice, long lengths of wire to the board connections for -9V, GND, IN and OUT. Connect IN and OUT to the jacks as shown. Connect all the GNDs together (twist them up and add a small amount of solder to tack it). Connect the battery - lead to the -9V wire, same method. Plug in. Go!

If it works, crack on and do your switch wiring. If not... aw man. At least you know the problem is with the circuit. Find out why, get it working, THEN worry about the switch etc.

Wire it up (if using a daughterboard please refer to the relevant document)

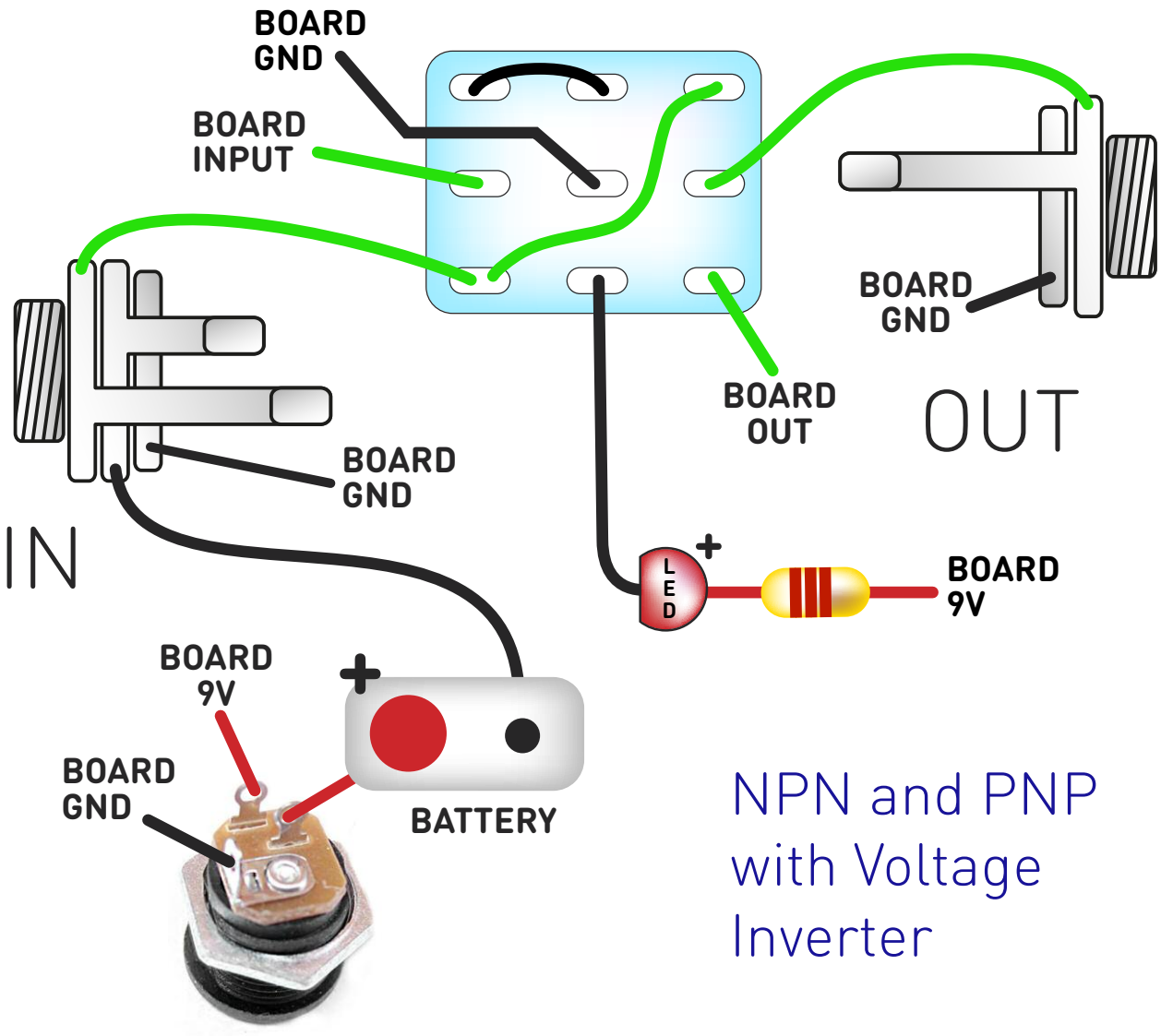

NPN and PNP with Voltage Inverter

Wiring shown above will disconnect the battery when you remove the jack plug from the input, and also when a DC plug is inserted.

The Board GND connections don't all have to directly attach to the board. You can run a couple of wires from the DC connector, one to the board, another to the IN jack, then daisy chain that over to the OUT jack.

It doesn't matter how they all connect, as long as they do.

This circuit is standard, Negative GND. Your power supply should be Tip Negative / Sleeve Positive. That's the same as your standard pedals (Boss etc), and you can safely daisy-chain your supply to this pedal.

Wire it up (if using a daughterboard please refer to the relevant document)

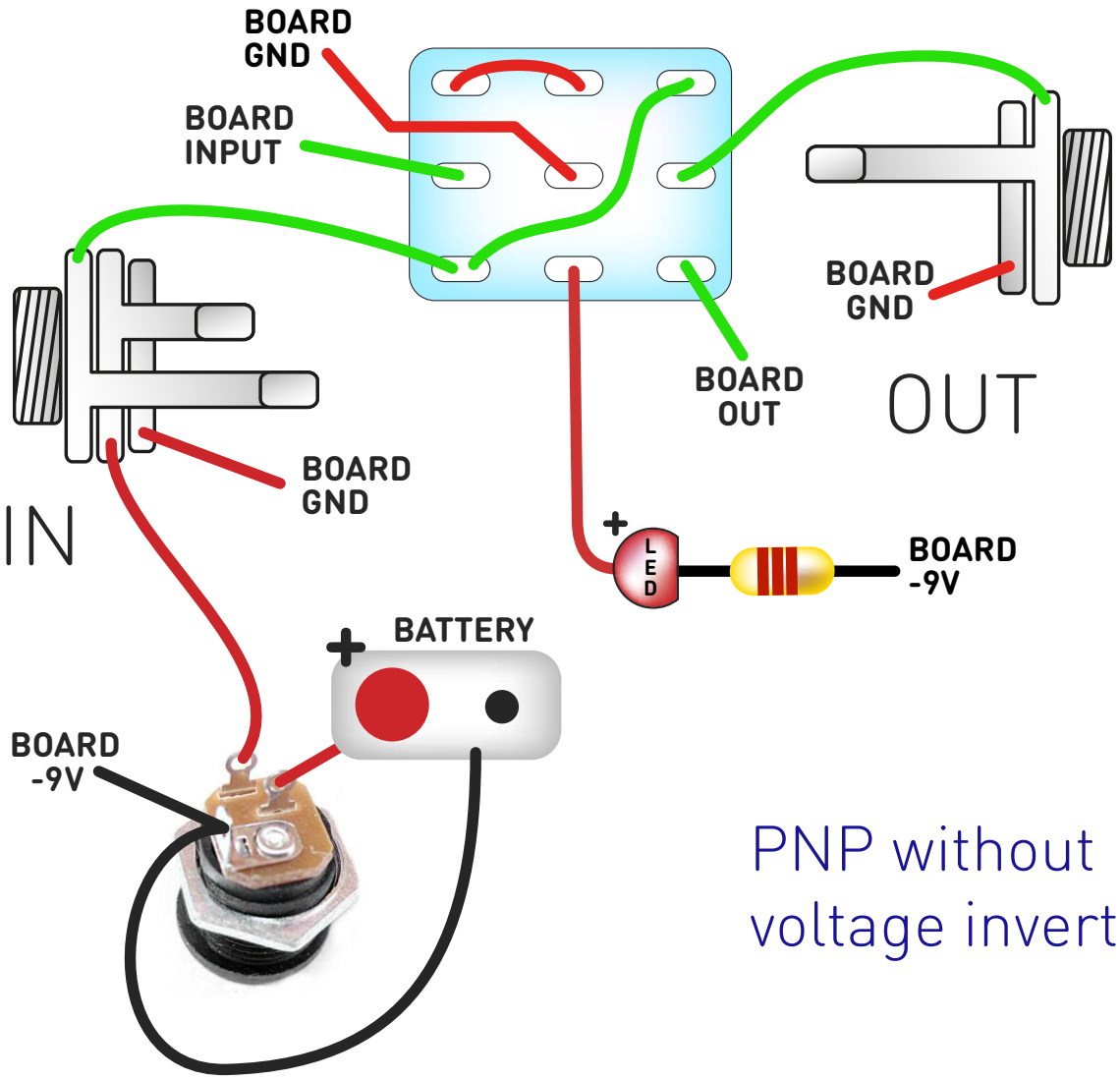

PNP without voltage inverter

Wiring shown above will disconnect the battery when you remove the jack plug from the input, and also when a DC plug is inserted.

The Board GND connections don't all have to directly attach to the board. You can run a couple of wires from the DC connector, one to the board, another to the IN jack, then daisy chain that over to the OUT jack.

It doesn't matter how they all connect, as long as they do.

This circuit is standard, Negative GND. Your power supply should be Tip Negative / Sleeve Positive. That's the same as your standard pedals (Boss etc), and you can safely daisy-chain your supply to this pedal.