FuzzPub

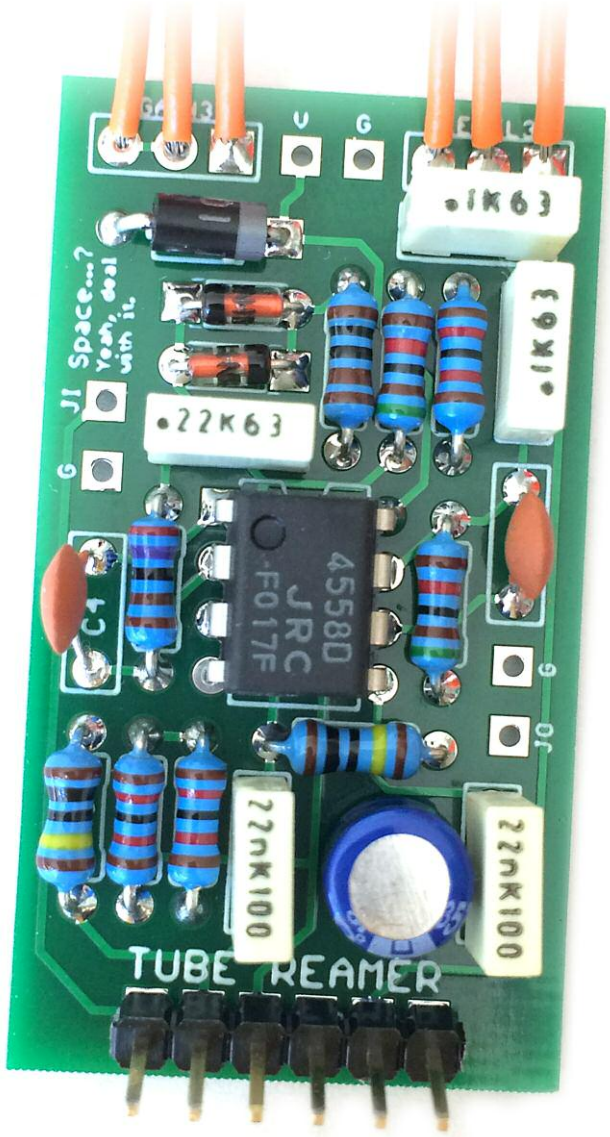

Tube Reamer

RunOffGroove's stripped down, bufferless Tube Screamer

IMPORTANT
Before you start...

Grab the general build doc that covers all FuzzPup builds. Most of the information you need for this build is in there.

Read it? OK, carry on.

FuzzPups

Lovely little boxes of joy with a totally standardised build pattern

Schematic + BOM

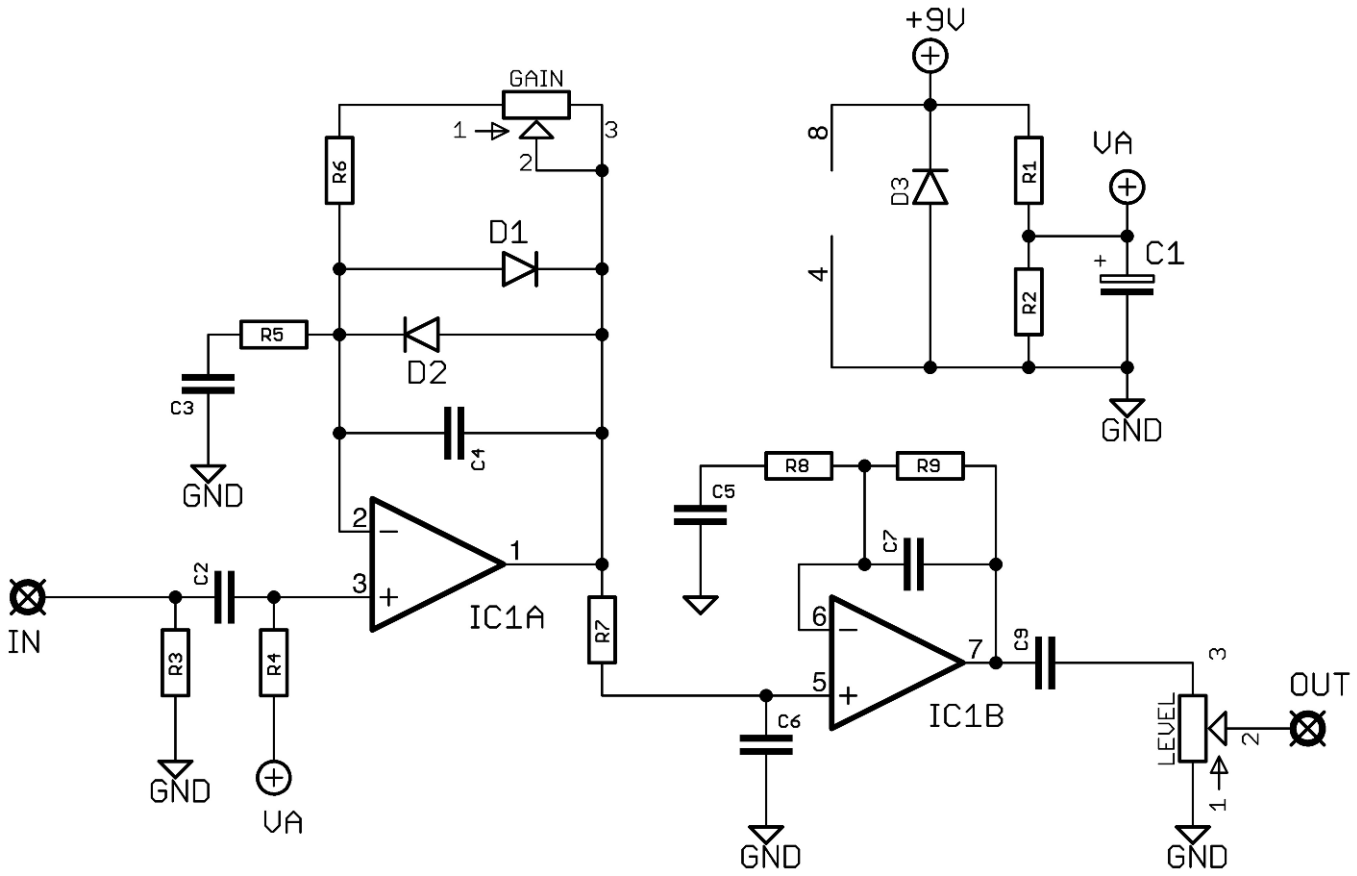

R1	12K	C1	22u elec	IC1	4558
R2	12K	C2	22n		
R3	1M	C3	220n	D1-2	1N4148
R4	1M	C4	150p	D3*	1N4001
R5	2K7	C5	100n		
R6	51K	C6	22n	GAIN	500KB
R7	1K	C7	100p	VOL	100KA
R8	12K	C9	100n		
R9	51K				

*Purely for power supply polarity protection.

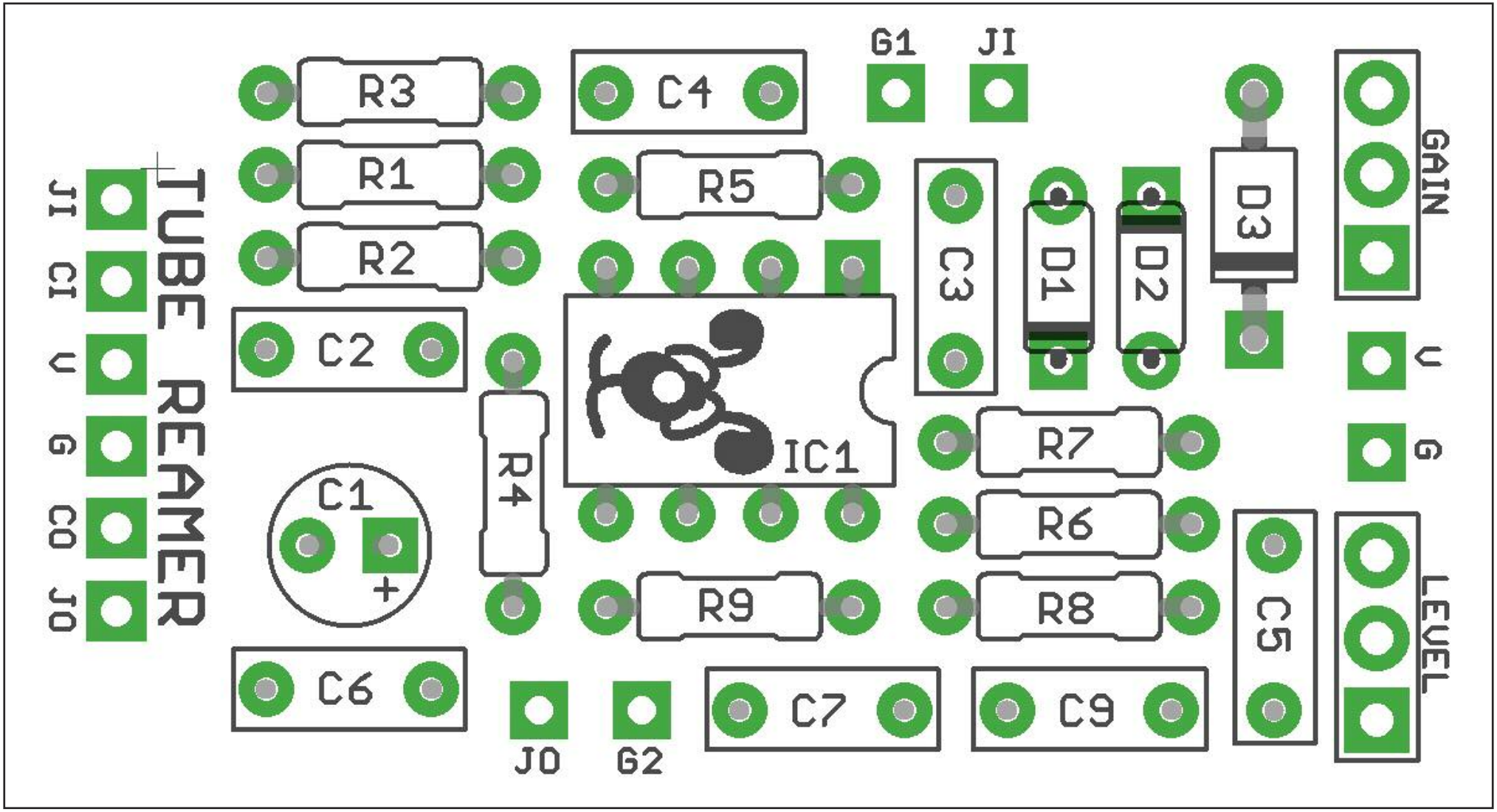

Notes

Extra power filtering cap

The original circuit design doesn't include a power smoothing capacitor between 9V and GND, but you can include one if you'd like some extra filtering. Anything from 22uf to 100uf.

This can be added to one of the sets of V and G pads in your build, depending on which wiring method you're using.

If you have a side-mounted DC socket and you're using the V and G pads on the footswitch daughterboard, add your extra cap to the V and G pads on the top edge of your main circuit board, + leg to V pad. Check the positioning of the board, pot and DC socket to see how it'll best fit within the space in the enclosure (note: the EPic Boost board is shown as example) >>>

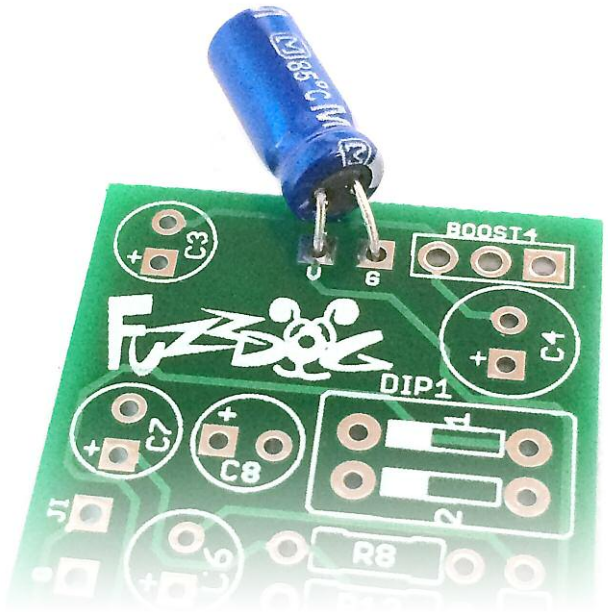

If you have a top-mounted DC socket and you're using the V and G pads on the the top edge of the main circuit board, add your cap to the V and G pads on the left side of the footswitch daugherboard, + leg to V pad. It should mount on the underside of the PCB so it'll sit next to the body of the footswitch when mounted. >>>

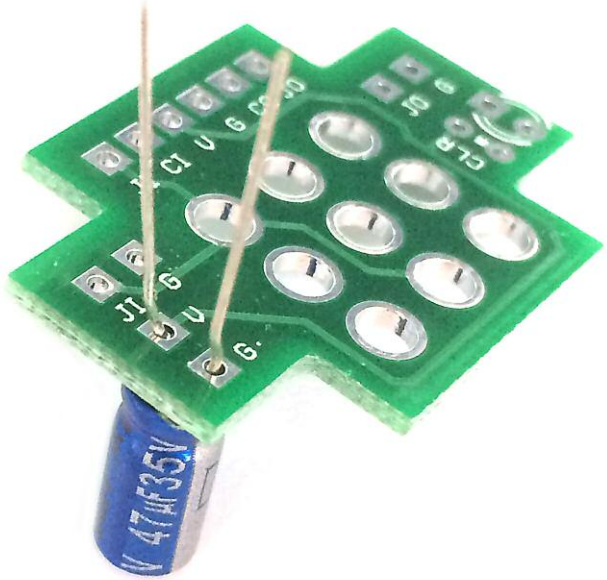

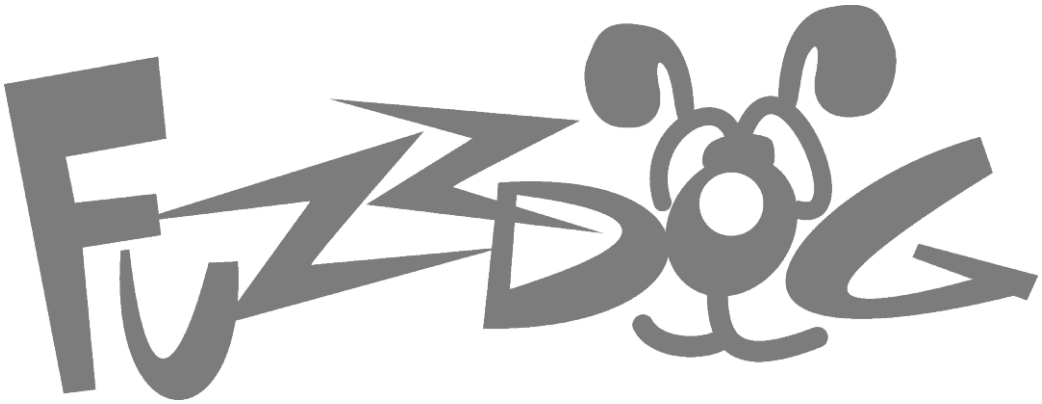

FuzzDog.co.uk