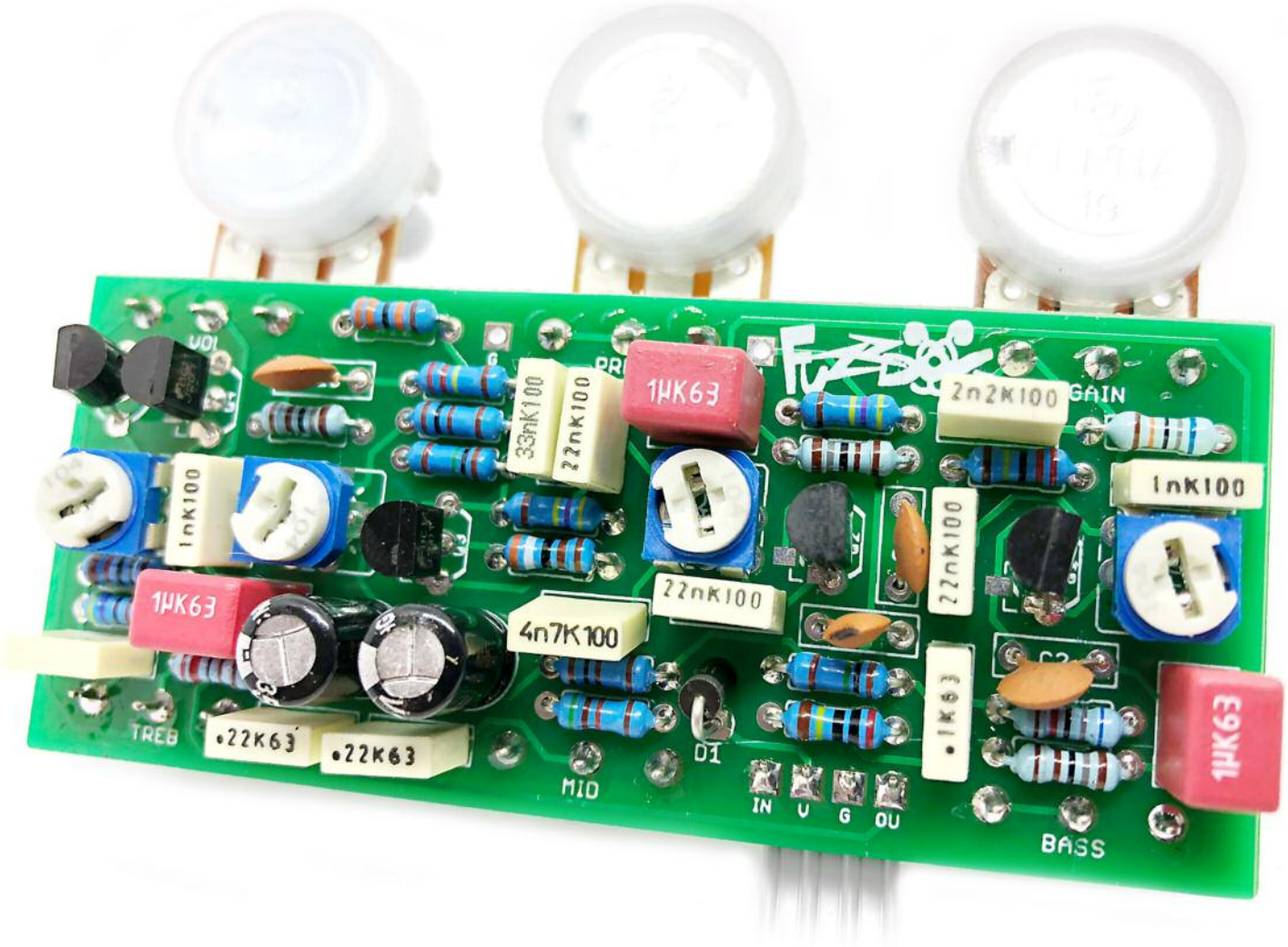


# Dr Boogie

## Mesa Boogie Rectifier in-a-box awesomeness

# Important notes

## If you're using any of our footswitch daughterboards, DOWNLOAD THE DAUGHTERBOARD DOCUMENT

- Download and read the appropriate build document for the daughterboard as well as this one BEFORE you start.
- DO NOT solder the supplied Current Limiting Resistor (CLR) to the main circuit board even if there is a place for it. This should be soldered to the footswitch daughterboard.

## POWER SUPPLY

Unless otherwise stated in this document this circuit is designed to be powered with 9V DC.

## COMPONENT SPECS

Unless otherwise stated in this document:

- Resistors should be 0.25W. You can use those with higher ratings but check the physical size of them.
- Electrolytics caps should be at least 25V for 9V circuits, 35V for 18V circuits. Again, check physical size if using higher ratings.

## LAYOUT CONVENTIONS

Unless otherwise stated in this document, the following are used:

- **Electrolytic capacitors:**
  Long leg (anode) to square pad.
- **Diodes:**
  Striped leg (cathode) to square pad.
- **ICs:**
  Square pad indicates pin 1.

# Schematic + BOM

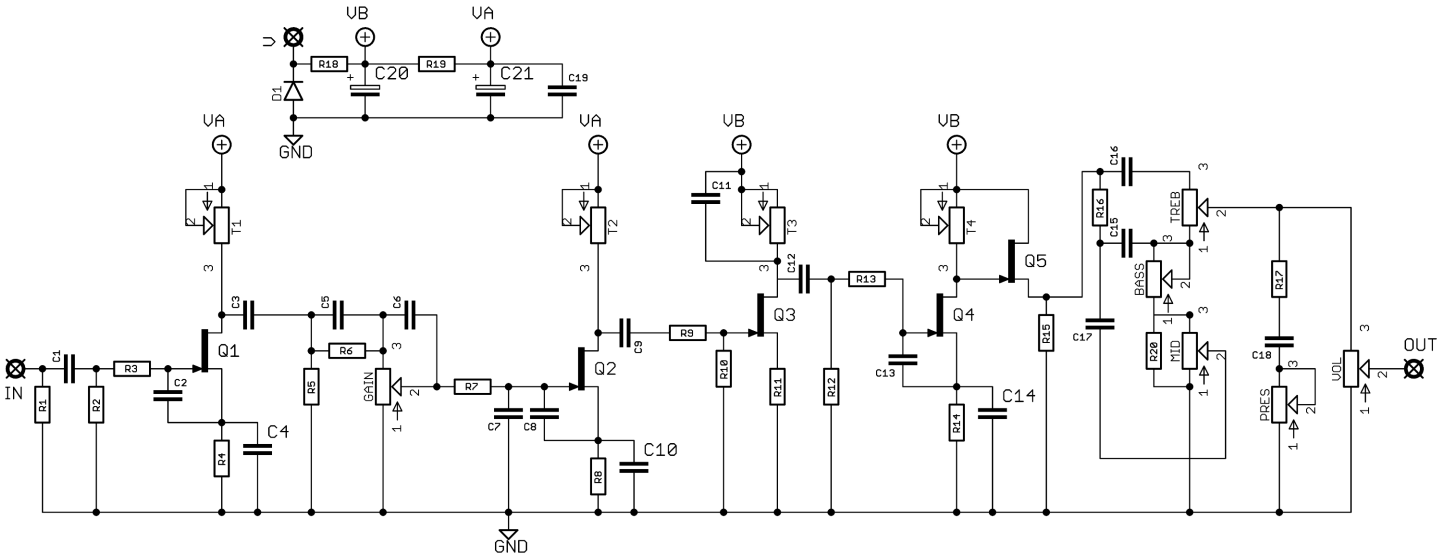


| | | | | | |
|---|---|---|---|---|---|
| R1 | 2M2 | C1 | 100n | Q1-5 | J201* |
| R2 | 680K | C2 | 220p | | |
| R3 | 68K | C3 | 22n | D1 | 1N4001 |
| R4 | 1K8 | C4 | 1u | | |
| R5 | 2M2 | C5 | 2n2 | VOL | 100KA |
| R6 | 680K | C6 | 1n | GAIN | 1MA |
| R7 | 470K | C7 | 22p | TREB | 25KA |
| R8 | 1K8 | C8 | 220p | MID | 5KB** |
| R9 | 470K | C9 | 22n | BASS | 100KA |
| R10 | 1M | C10 | 1u | PRES | 10KB |
| R11 | 3K9 | C11 | 1n | | |
| R12 | 330K | C12 | 22n | T1-4 | 100K TRIM‡ |
| R13 | 220K | C13 | 220p | | |
| R14 | 1K8 | C14 | 1u | | |
| R15 | 10K | C15 | 220n | | |
| R16 | 4K7 | C16 | 6n8 | | |
| R17 | 2K2 | C17 | 220n | | |
| R18 | 100R | C18 | 33n | | |
| R19 | 100R | C19 | 4n7 | | |
| R20 | 5K1** | C20 | 100u elec | | |
| | | C21 | 100u elec | | |

These values are based on the Gaus Markov mods which make the circuit much better than the stock values.

**The PCB has been designed so you can use the SMT equivalents of these FETs.
We recommend a couple of substitutes too. See next later in the doc.

***The design calls for a 2.5K pot for MIDS. R20 in series with a 5KB works fine.
If you have a 2.5KB pot, kudos! Omit R20.

‡ If you want to be really precise with your biasing you can use multi-turn trimmers.

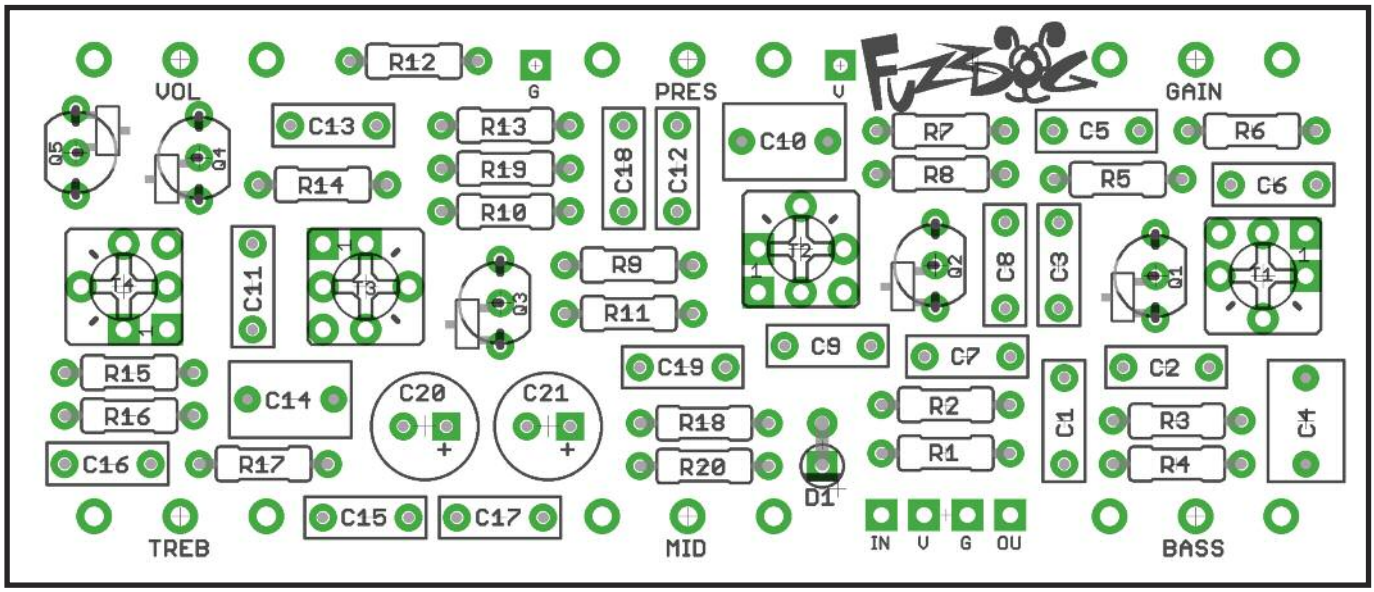


The power and signal pads on the PCB conform to the FuzzDog Direct Connection format, so can be paired with the appropriate daughterboard for quick and easy offboard wiring. Check the separate daughterboard document for details.

Be very careful when handling and soldering the FETs. They're very sensitive to heat and static.

Snap the small metal tag off the pots so they can be mounted flush in the box.

You should solder all other board-mounted components before you solder the pots. Once they're in place you'll have no access to much of the board. Make sure your pots all line up nicely. The best way to do that is to solder a single pin of each pot in place then melt and adjust if necessary before soldering in the other two pins. Ensure you leave a decent gap between the pot body and the PCB otherwise you risk shorting out the circuit.

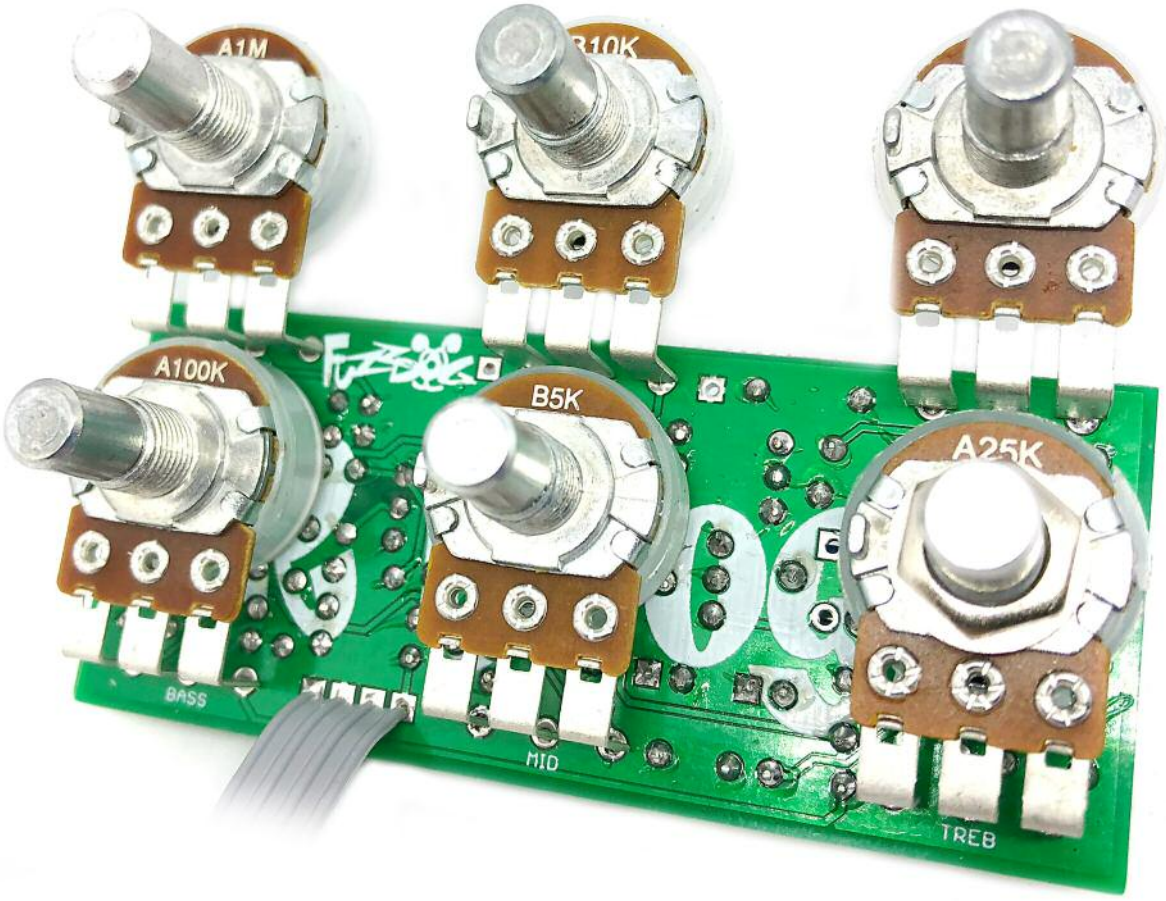

# BIASING

**See the next page for the test wiring instructions.**
**Once you have everything set up, come back here.**

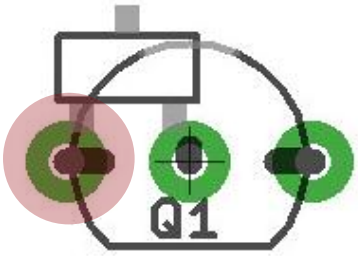


You need to adjust the trimmers T1-4 to adjust the bias voltage at the drain of each of the FETs (Q1-4).

To do this, set your multimeter to DC Voltage, with a range that includes 9V.

Put your common probe on any ground point on the board, or one of your jack ground lugs. It helps if this probe is a clip-type rather than just a point.

Check your supply voltage by putting the second probe on the V pad of the PCB.

Now place the second probe onto the drain pad of Q1 (shown in red above). Adjust your trimmer until you get to around half your supply voltage. We tend to have it slightly above as this makes squealing much less likely (i.e. if our supply is 9V we'll adjust to 5V).

Repeat for each of the FETs. The trimmer numbers correspond with the FET number - T1 adjusts Q1 etc.

Don't get hung up on exact numbers. Tweak until you like what you hear, but around half supply is the best starting point.

You may get some squeal at first. Just keep tweaking until it goes. Setting the bias voltage of Q1 higher works well. Some people recommend having it as high as 7V. It's totally down to personal taste.

# TRANSISTOR SUBSTITUTIONS

You don't have to use J201. We liked the combination of 2N5457 for Q1-2, with J201 for Q3-5. Others may work better for you. Just check your pinouts.

# Test the board!

## Check the relevant daughterboard document for more info before you undertake this stage.

## UNDER NO CIRCUMSTANCES will troubleshooting help be offered if you have skipped this stage. No exceptions.

Once you've finished the circuit it makes sense to test is before starting on the switch and LED wiring. It'll cut down troubleshooting time in the long run. If the circuit works at this stage, but it doesn't once you wire up the switch - guess what? You've probably made a mistake with the switch.

Solder some nice, long lengths of wire to the board connections for 9V, GND, IN and OUT. Connect IN and OUT to the jacks as shown. Connect all the GNDs together (twist them up and add a small amount of solder to tack it). Connect the battery + lead to the 9V wire, same method. Plug in. Go!

If you're using a ribbon cable you can tack the wires to the ends of that. It's a lot easier to take them off there than it is do desolder wires from the PCB pads.

If it works, carry on and do your switch wiring. If not... aw man. At least you know the problem is with the circuit. Find out why, get it working, THEN worry about the switch etc.

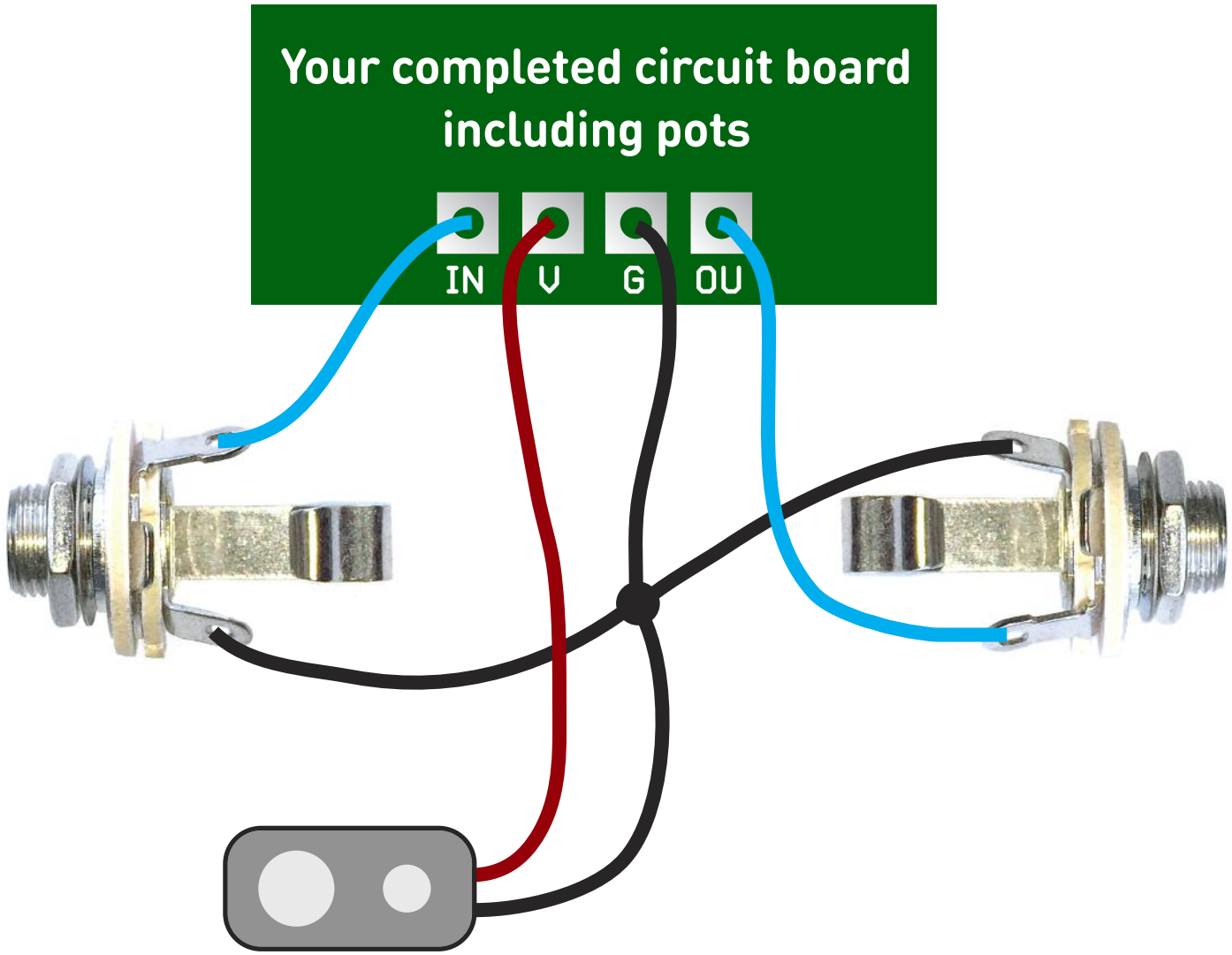

# Wire it up (if using a daughterboard please refer to the relevant document)

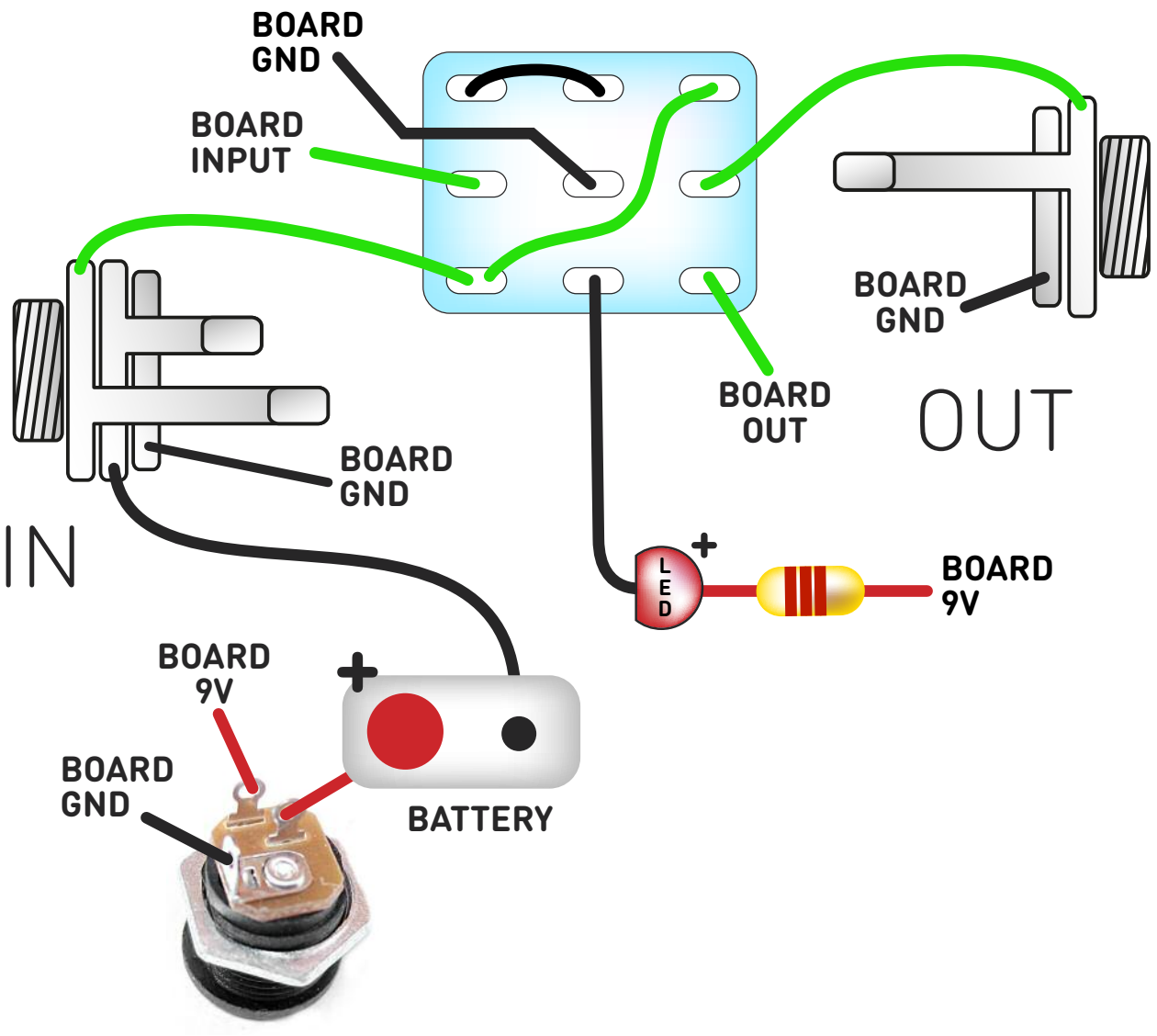


Wiring shown above will disconnect the battery when you remove the jack plug from the input, and also when a DC plug is inserted.

The Board GND connections don't all have to directly attach to the board. You can run a couple of wires from the DC connector, one to the board, another to the IN jack, then daisy chain that over to the OUT jack.

It doesn't matter how they all connect, as long as they do.

This circuit is standard, Negative GND. Your power supply should be Tip Negative / Sleeve Positive. That's the same as your standard pedals (Boss etc), and you can safely daisy-chain your supply to this pedal.

# Drilling template

Hammond 1590BB

91 x 116 x  x 31mm

Recommended drill sizes:

| | |
|---|---|
| Pots | 7mm |
| Jacks | 10mm |
| Footswitch | 12mm |
| DC Socket | 12mm |

It's a good idea to drill the holes for the pots 8mm to give yourself some wiggle room unless you're a drill ninja

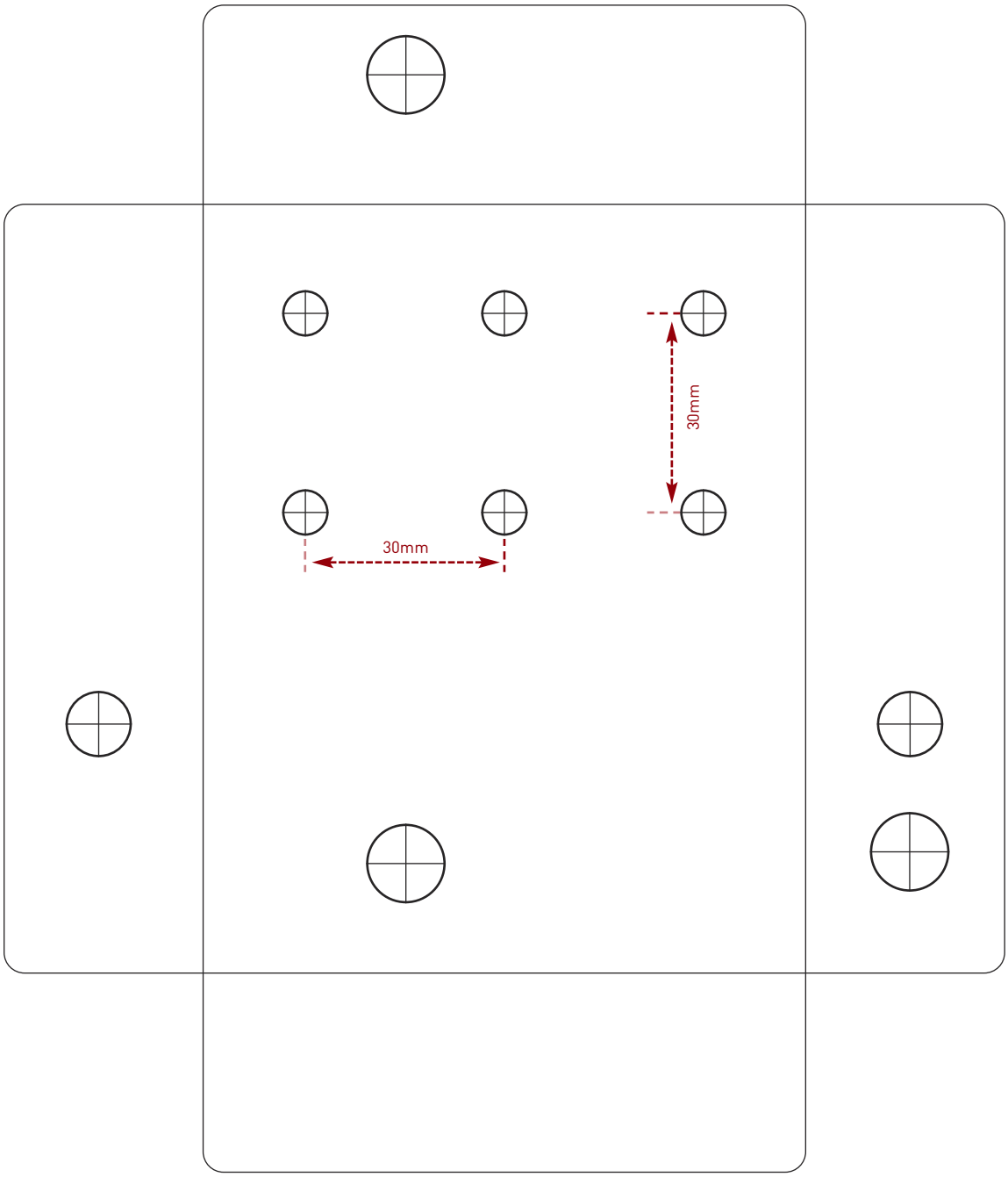


This template is a rough guide only. You should ensure correct marking of your enclosure before drilling. You use this template at your own risk.
Pedal Parts Ltd can accept no responsibility for incorrect drilling of enclosures.

FuzzDog.co.uk