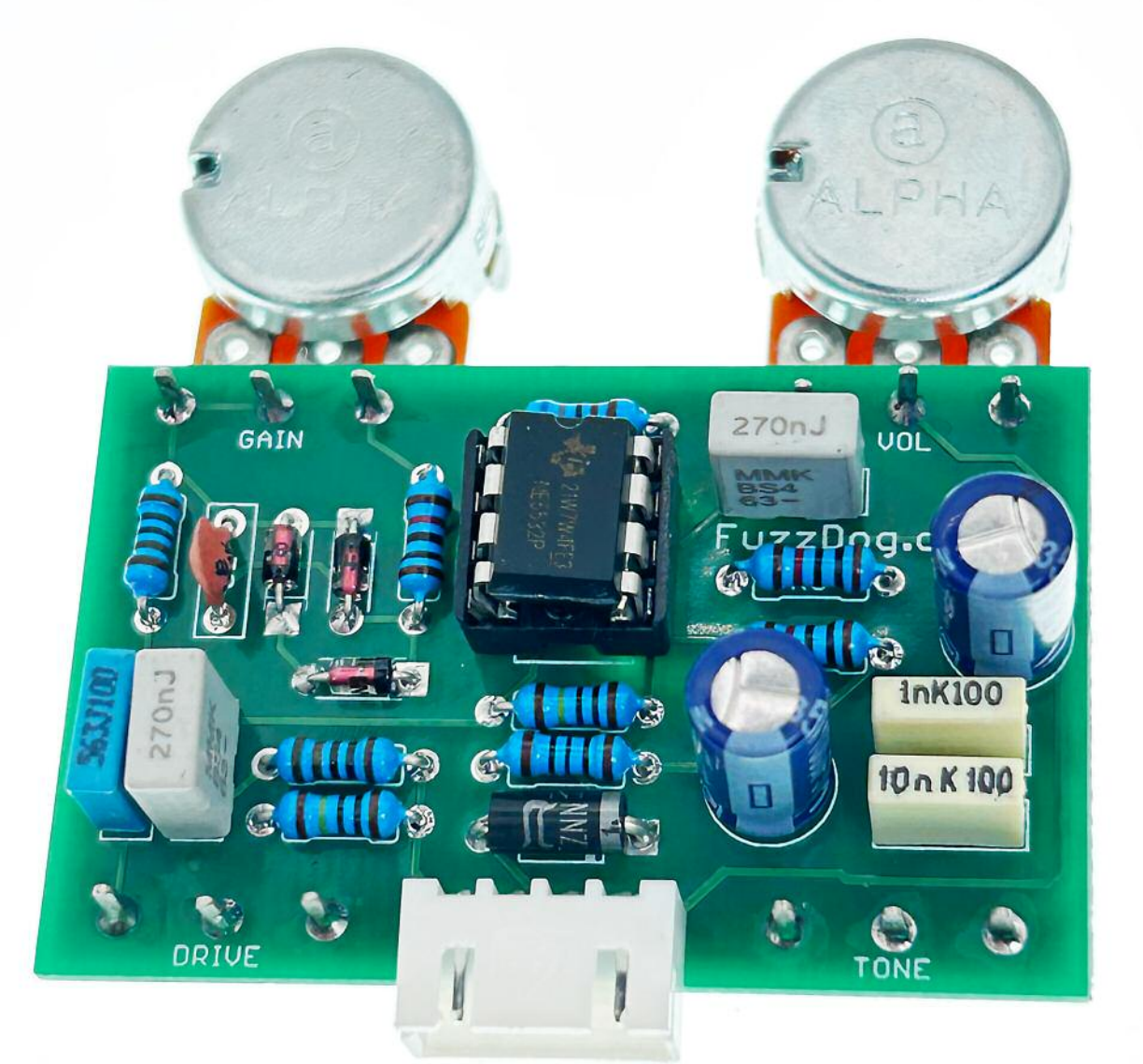

Blisterlilly

El Musico Loco's take on the Tube Screamer

Contents of this document are ©2026 Pedal Parts Ltd.
No reproduction permitted without the express written permission of Pedal Parts Ltd. All rights reserved.

Before you dig in, ensure you download and read the **General Build Guide**.

It contains all the information you need for a successful outcome.

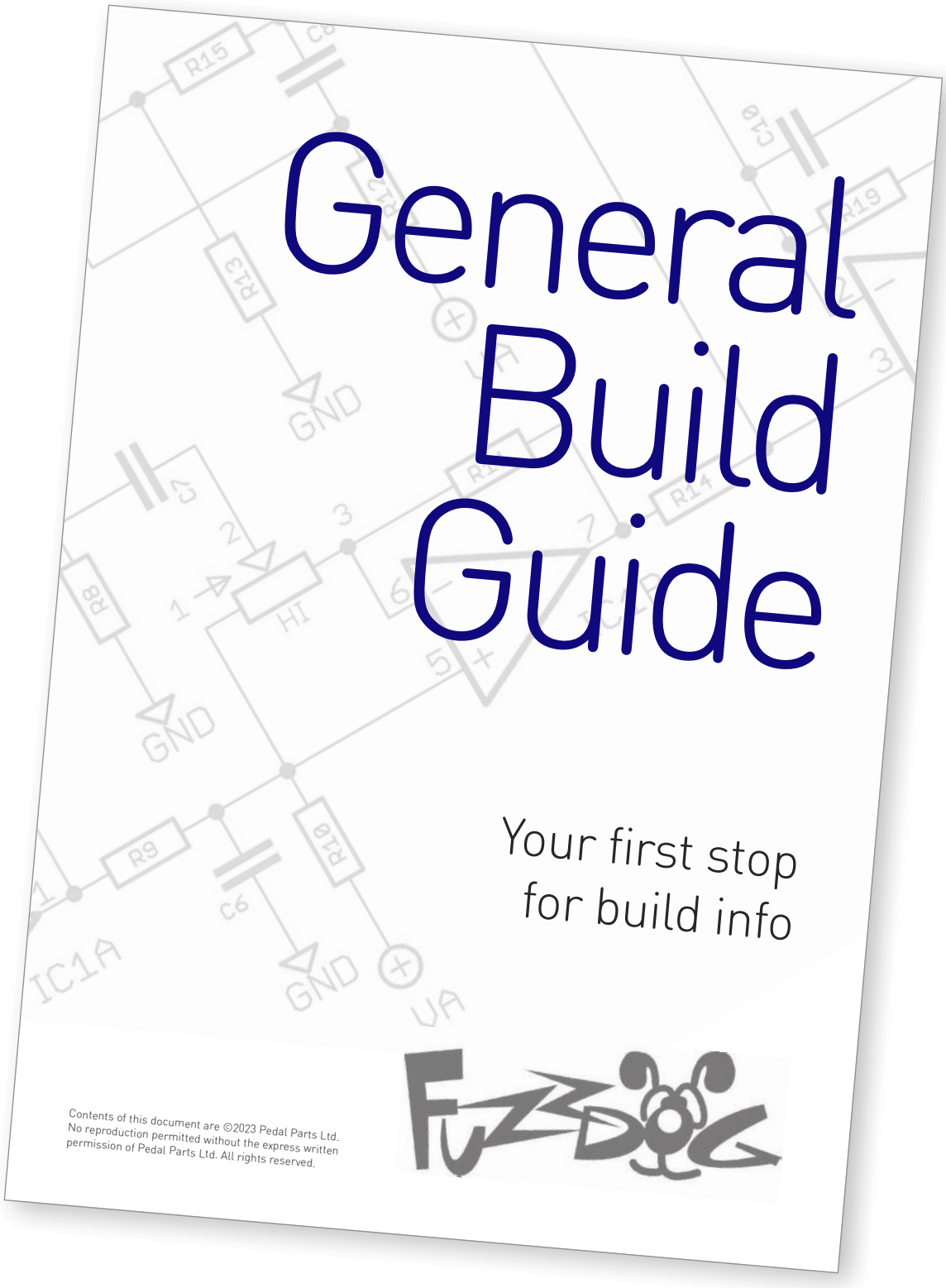

Schematic + BOM

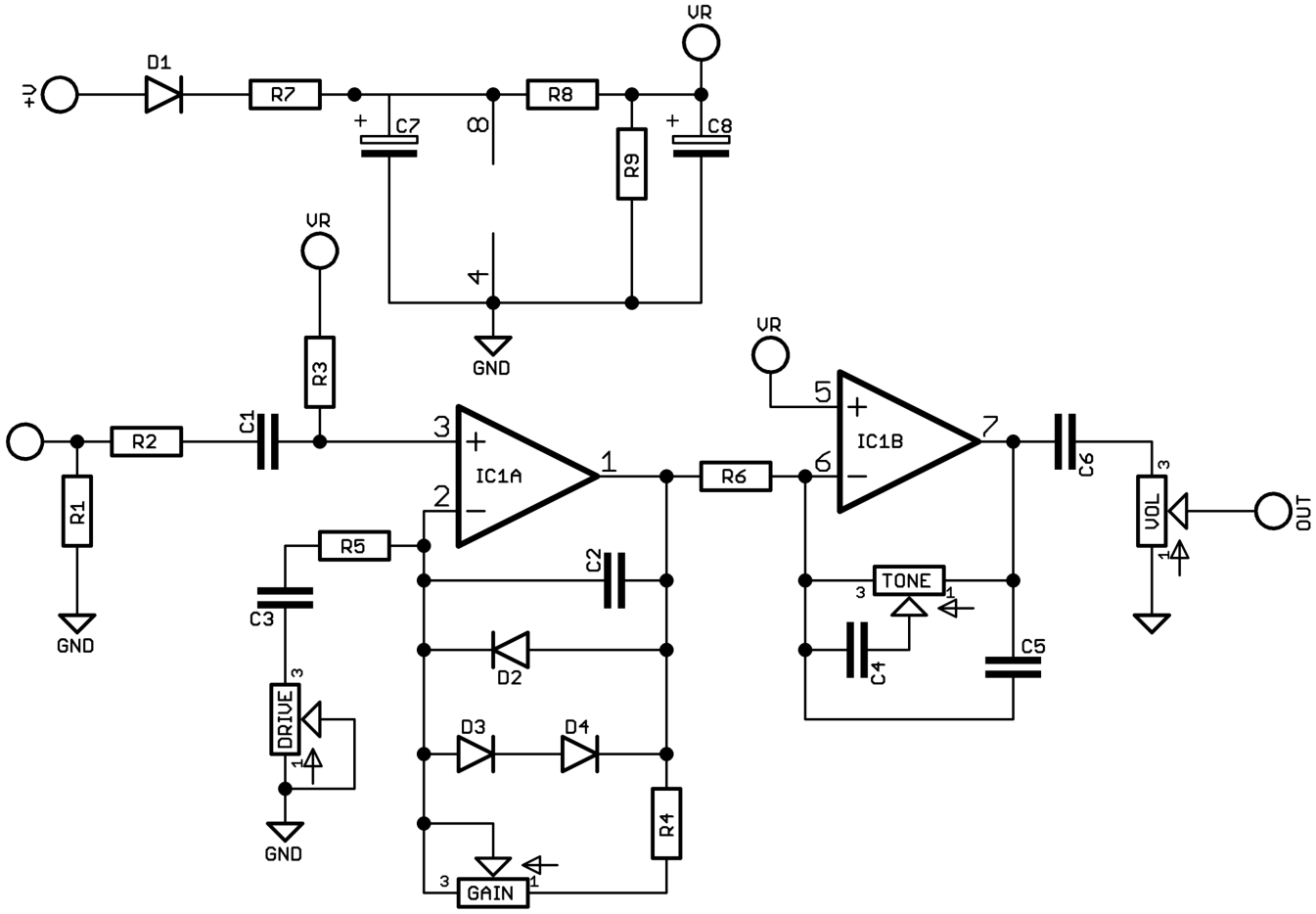

R1	1M	C1	270n	D1	1N5817
R2	1K	C2	100p	D2-4	1N4148
R3	1M	C3	56n		
R4	10K	C4	10n	IC1	NE5532
R5	1K	C5	1n		
R6	6K8	C6	270n	DRIVE	10KB
R7	100R	C7	100u elec	GAIN	1MA
R8	10K	C8	100u elec	TONE	100KB
R9	10K			VOL	250KA

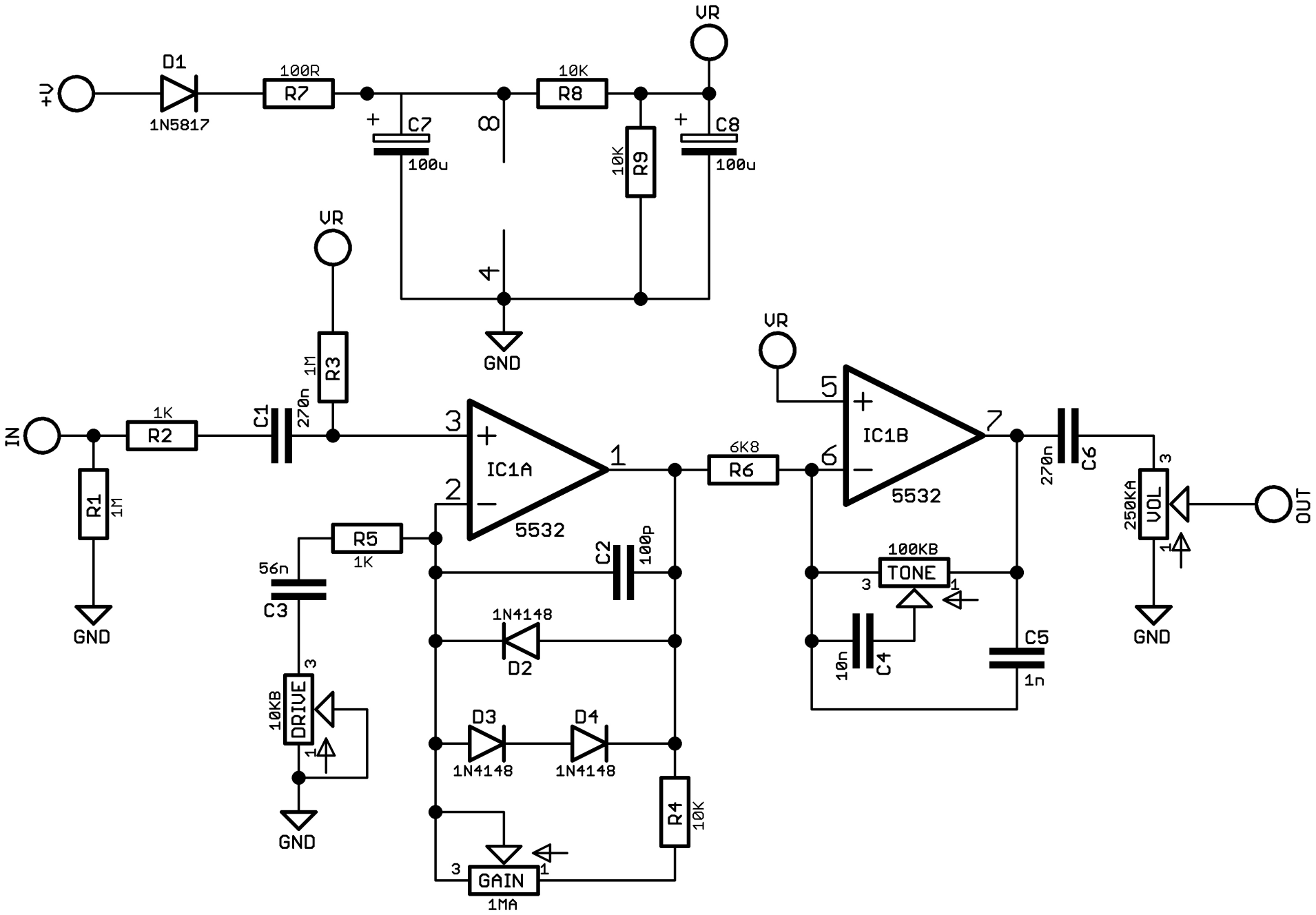

+V
D1
1N5817
100R
R7
C7
100u
8
10K
R8
VR
10K
R9
C8
100u
4
GND
VR
R3
1M
IN
1K
R2
C1
270n
R1
1M
GND
3
2
IC1A
5532
1
R5
1K
56n
C3
10KB
DRIVE
GND
C2
100p
1N4148
D2
D3
1N4148
D4
1N4148
R4
10K
GAIN
1MA
6K8
R6
VR
5
6
IC1B
5532
7
100KB
TONE
C4
10n
C5
1n
270n
C6
250KA
VOL
OUT
GND

PCB layout ©2026 Pedal Parts Ltd.

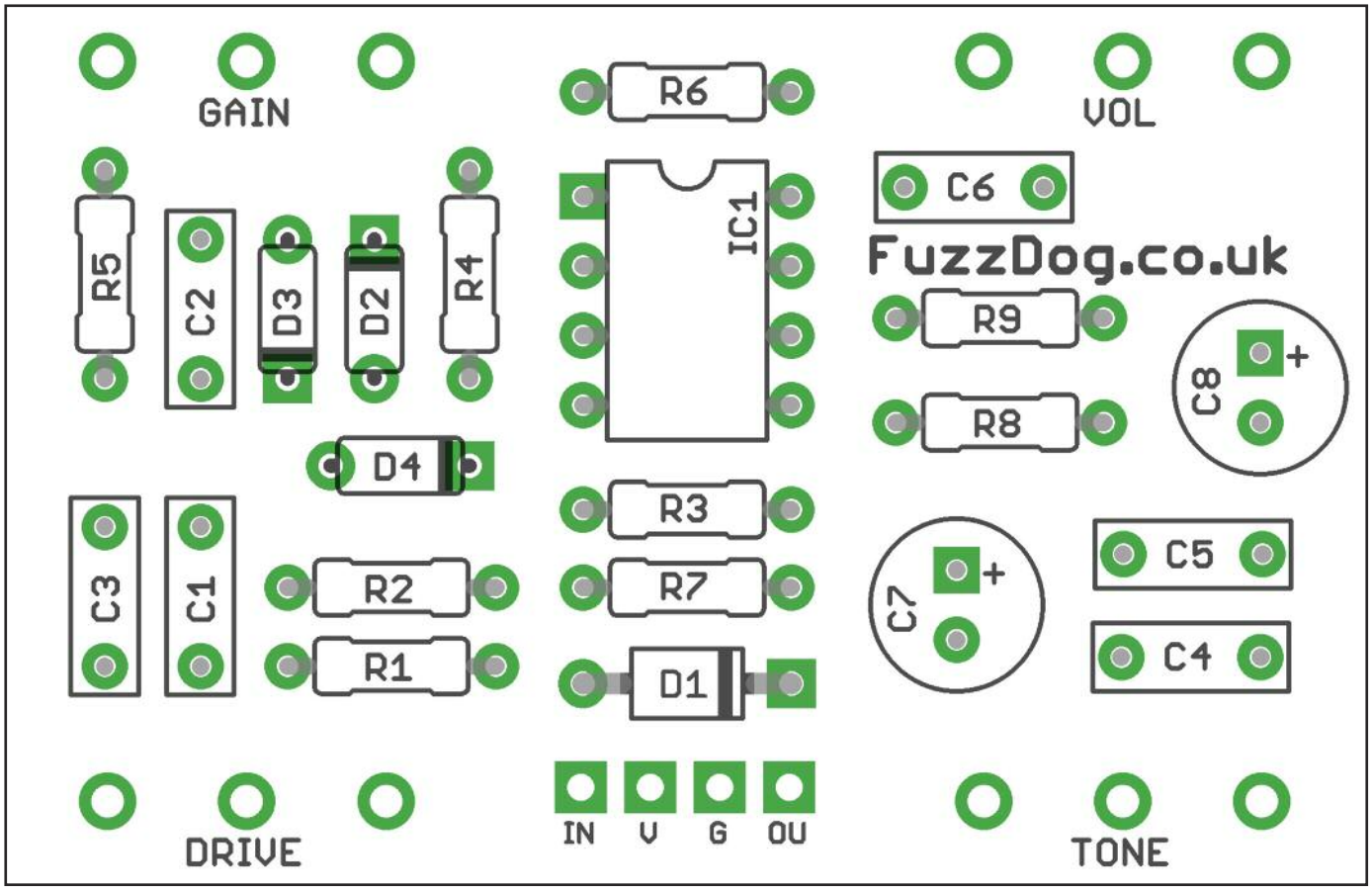

Snap the small metal tags off the pots so they can be mounted flush in the box.

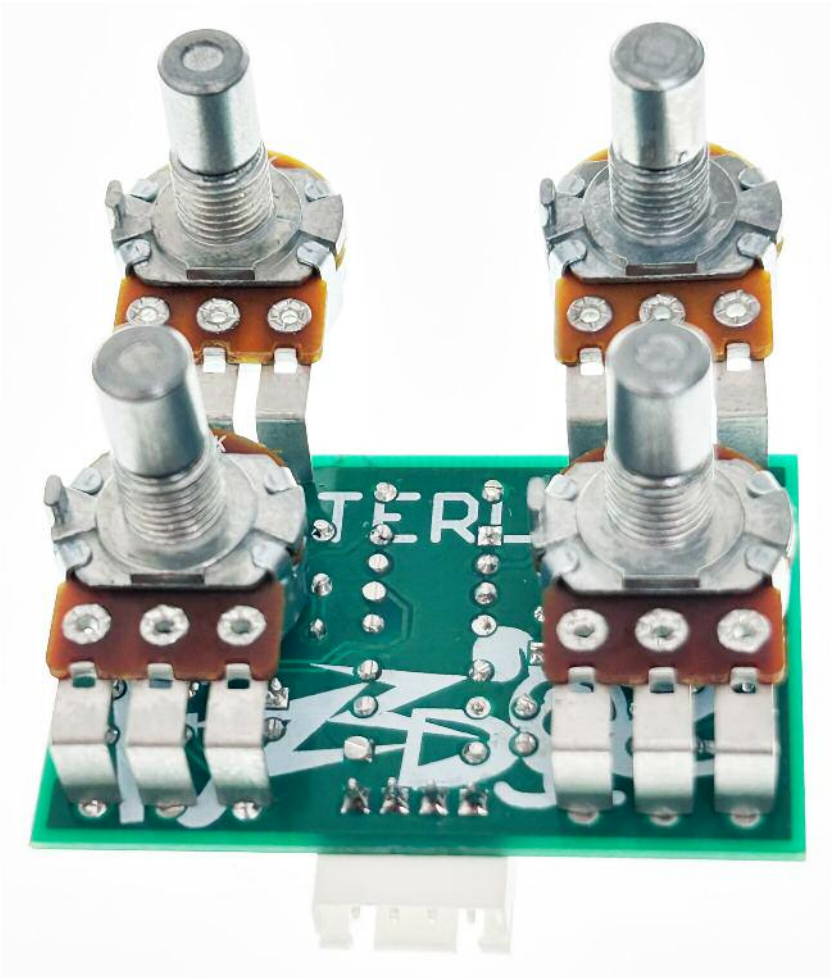

Drilling template

Hammond 1590B - 60 x 111 x 31mm

Drill sizes listed are minimum.
It's a good idea to add 1mm to anything mounted on the PCB that'll poke through the front of the enclosure.

Drill sizes:

Pots	7mm
Jacks	10mm
Footswitch	12mm
DC Socket	12mm
Toggle switches	6mm
Rotary switches	10mm

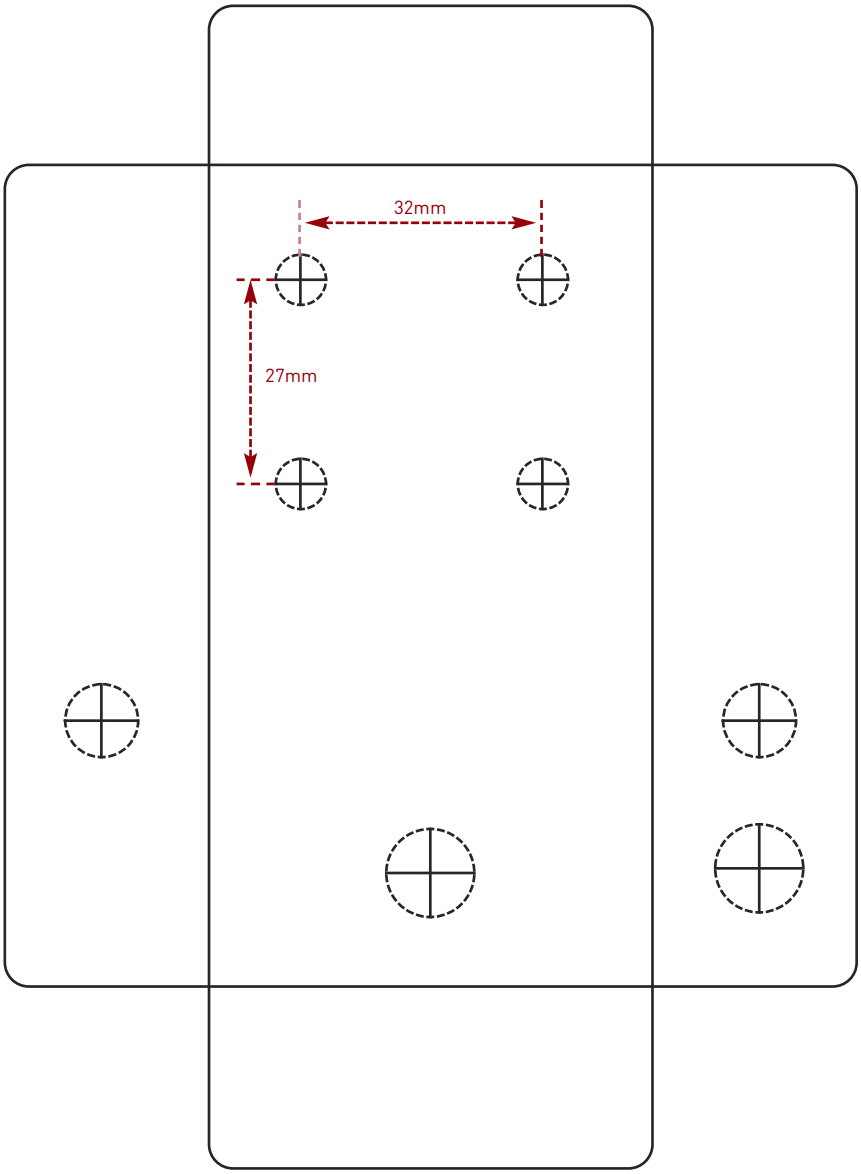

This template is a rough guide only. You should ensure correct marking of your enclosure before drilling. You use this template at your own risk.
Pedal Parts Ltd can accept no responsibility for incorrect drilling of enclosures.

FuzzDog.co.uk